Soyuz-U Odissea Mission

Glossy Paper Sheet 7, rev.1 scale 1:100

© R. Fortezza-G. De Chiara (MARS Center 2002)

Microgravity Advanced Research and Support Center

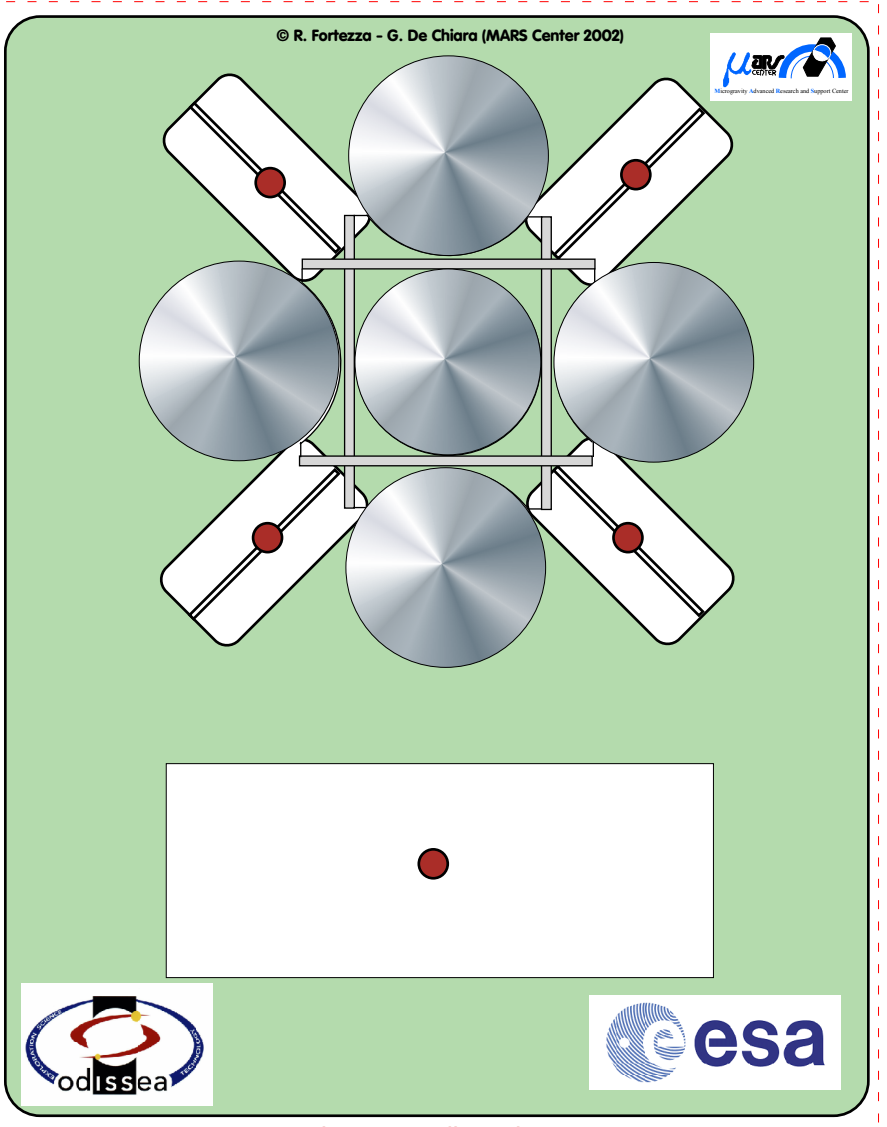

glue on cardboard

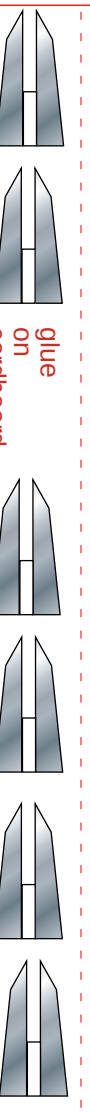

glue on cardboard

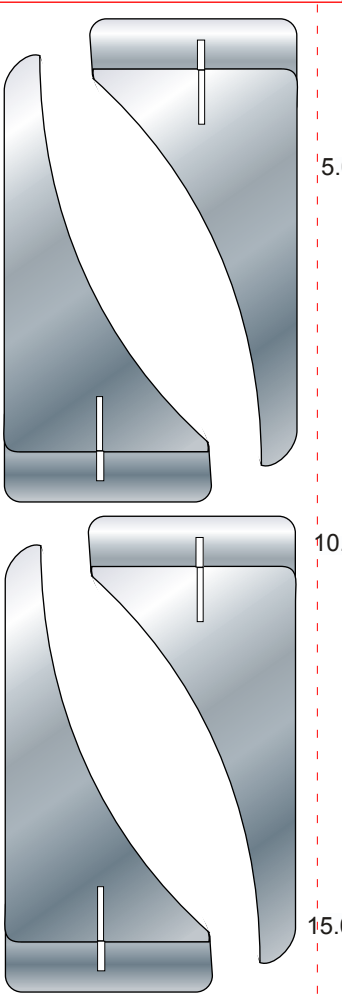

glue on cardboard

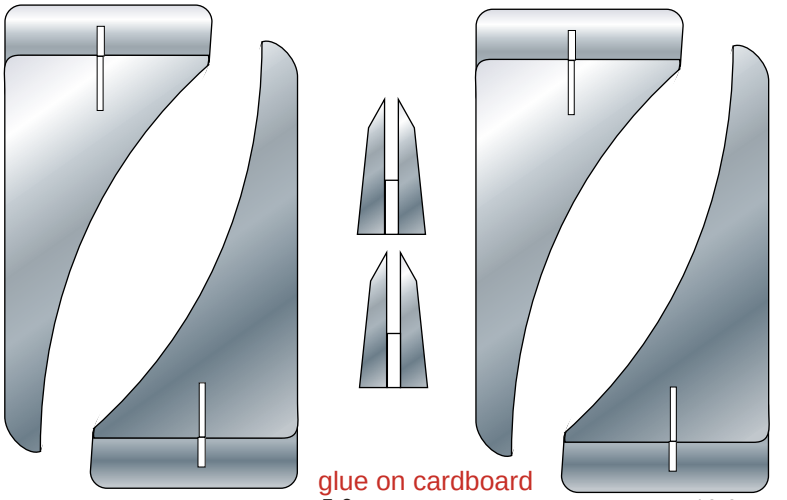

glue on cardboard

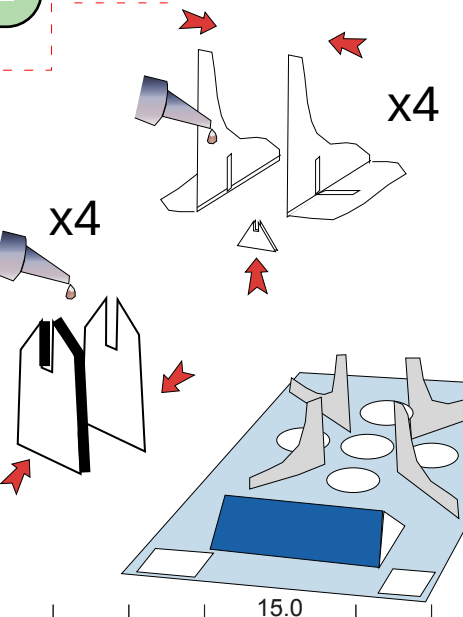

5.0 10.0 15.0 20.0 25.0 cm.

On the printed sheet check the metric scale marks with a ruler (if they fit the scale is 1:100)