Temple of the Forbidden Eye Paper Model—License Agreement

By downloading this file and the accompanying Licensed Materials, the end user ("Licensee") agrees to conform to this License Agreement (this "Agreement") with Robert Nava, the Disney Experience website [www.disneyexperience.com] ("Licensor").

I. Content of Licensed Materials; Grant of License

The materials that are the subject of this Agreement shall consist of the Temple of the Forbidden Eye Paper Model in electronic and physical form (hereinafter referred to as the "Licensed Materials").

Licensee acknowledges that the copyright and title to the Licensed Materials and any trademarks or service marks relating thereto remain with Licensor and/or its suppliers. Licensee shall not have right, title or interest in the Licensed Materials except as expressly set forth in this Agreement.

Licensor hereby grants to Licensee non-exclusive use of the Licensed Materials in accordance with this Agreement.

II. Access of Licensed Materials to Licensee

Licensor will provide the Licensed Materials to the Licensee in the following manner:

File Transfer. Copies of the Licensed Materials will be provided to the Licensee through the Disney Experience website at the sole discretion of the Licensor.

III. Fees

Licensee is required to make no payment to Licensor for use of the Licensed Materials.

IV. Authorized Use of Licensed Materials

Authorized Uses. Licensee may make all use of the Licensed Materials as is consistent with the Fair Use Provisions of United States and international law. Nothing in this Agreement is intended to limit in any way whatsoever Licensee's rights under the Fair Use provisions of United States or international law to use the Licensed Materials.

The Licensed Materials may be used for purposes of research, education or other non-commercial use as follows:

Archival/Backup Copy. Upon request of Licensee, Licensee may create one (1) copy of the entire set of Licensed Materials to be maintained as a backup or archival copy during the term of this Agreement.

V. Specific Restrictions on Use of Licensed Materials

Unauthorized Use. Licensee shall not knowingly permit anyone other to use the Licensed Materials.

Modification of Licensed Materials. Licensee shall not modify or create a derivative work of the Licensed Materials without the prior written permission of Licensor.

Removal of Copyright Notice. Licensee may not remove, obscure or modify any copyright or other notices included in the Licensed Materials.

Distribution Rights. Licensee has no rights to transfer, host, or re-distribute the Licensed Materials or its derivatives under any circumstances or by any means available now or in the future.

Commercial Purposes. Other than as specifically permitted in this Agreement, Licensee may not use the Licensed Materials for commercial purposes, including but not limited to the sale of the Licensed Materials or bulk reproduction or distribution of the Licensed Materials in any form.

VI. Licensor Performance Obligations

Availability of Licensed Materials. Licensor shall make the Licensed Materials available to Licensee at his/her discretion.

Notification of Modifications of Licensed Materials. Licensee understands that from time to time the Licensed Materials may be added to, modified, or deleted from by Licensor and/or that portions of the Licensed Materials may migrate to other formats.

Completeness of Content. Where applicable, Licensor will inform Licensee of instances where online content differs from the print versions of the Licensed Materials.

Where applicable, Licensor shall use reasonable efforts to ensure that the online content is at least as complete as print versions of the Licensed Materials, represents complete, accurate and timely replications of the corresponding content contained within the print versions of such Materials, and will cooperate with Licensee to identify and correct errors or omissions.

Withdrawal of Licensed Materials. Licensor reserves the right to withdraw from the Licensed Materials any item or part of an item for which it no longer retains the right to publish, or which it has reasonable grounds to believe infringes copyright or is defamatory, obscene, unlawful or otherwise objectionable.

VII. Licensee Performance Obligations

Protection from Unauthorized Use. Licensee shall use reasonable efforts to protect the Licensed Materials from any use that is not permitted under this Agreement. In the event of any unauthorized use of the Licensed Materials by an Authorized User, (a) Licensor may terminate such Authorized User's access to the Licensed Materials, (b) Licensor may terminate the access of the Internet Protocol ("IP") address(es) from which such unauthorized use occurred, and/or (c) Licensee shall terminate such Authorized User's access to the Licensed Materials upon Licensor's request. Licensor shall take none of the steps described in this paragraph without first providing reasonable notice to Licensee and cooperating with the Licensee to avoid recurrence of any unauthorized use.

VIII. Early Termination

In the event that either party believes that the other materially has breached any obligations under this Agreement, or if Licensor believes that Licensee has exceeded the scope of the License, such party shall so notify the breaching party in writing. The breaching party shall have 1 week from the receipt of notice to cure the alleged breach and to notify the non-breaching party in writing that cure has been effected. If the breach is not cured within the 1 week, the non-breaching party shall have the right to terminate the Agreement without further notice.

Upon Termination of this Agreement for cause online access to the Licensed Materials by Licensee and shall be terminated. Authorized copies of digital Licensed Materials must be destroyed immediately.

IX. Perpetual License

Except for termination for cause, Licensor hereby grants to Licensee a nonexclusive, royalty-free, perpetual license to use any Licensed Materials that were accessible during the term of this Agreement. Such use shall be in accordance with the provisions of this Agreement. The means by which Licensee shall have access to such Licensed Materials shall be in a manner and form substantially equivalent to the means by which access is provided under this Agreement.

X. Warranties

Subject to the Limitations set forth elsewhere in this Agreement:

Licensor warrants that it has the right to license the rights granted under this Agreement to use Licensed Materials, that it has obtained any and all necessary permissions from third parties to license the Licensed Materials, and that use of the Licensed Materials by Authorized Users in accordance with the terms of this Agreement shall not infringe the copyright of any third party.

XI. Limitations on Warranties

Notwithstanding anything else in this Agreement:

Neither party shall be liable for any indirect, special, incidental, punitive or consequential damages, including but not limited to loss of data, business interruption, or loss of profits, arising out of the use of or the inability to use the Licensed Materials.

Licensor makes no representation or warranty, and expressly disclaims any liability with respect to the content of any Licensed Materials, including but not limited to errors or omissions contained therein, libel, infringement of rights of publicity, privacy, trademark rights, moral rights, or the disclosure of confidential information.

Except for the express warranties stated herein, the Licensed Materials are provided on an "as is" basis, and Licensor disclaims any and all other warranties, conditions, or representations (express, implied, oral or written), relating to the Licensed Materials or any part thereof, including, without limitation, any and all implied warranties of quality, performance, merchantability or fitness for a particular purpose. Licensor makes no warranties respecting any harm that may be caused by the transmission of a computer virus, worm, time bomb, logic bomb or other such computer program. Licensor further expressly disclaims any warranty or representation to Authorized Users, or to any third party.

XII. Assignment and Transfer

Neither party may assign, directly or indirectly, all or part of its rights or obligations under this Agreement without the prior written consent of the other party, which consent shall not be unreasonably withheld or delayed.

XIII. Governing Law

This Agreement shall be interpreted and construed according to, and governed by, the laws of California, excluding any such laws that might direct the application of the laws of another jurisdiction. The federal or state courts located in California shall have jurisdiction to hear any dispute under this Agreement.

XIV. Entire Agreement

This Agreement constitutes the entire agreement of the parties and supersedes all prior communications, understandings and agreements relating to the subject matter hereof, whether oral or written.

XV. Amendment

No modification or claimed waiver of any provision of this Agreement shall be valid except by written amendment signed by authorized representatives of Licensor and Licensee.

TEMPLE OF THE FORBIDDEN EYE



- Difficulty Level: 7 (of 10)
- Width: 13”, Height: 21”, Depth: 16 ”
- 491 Full-color pieces.
- Contains several hidden Mickeys.

Snake Pillars:

- Difficulty Level: 6 (of 10)
- Width: 2.5”, Height: 6.5”, Depth: 2.5 ”

Required Tools:

- Adobe® Reader®
- Color Printer
- Glue
- X-acto Knife (These are very sharp and can cause serious injury! Use with extreme caution, and keep out of reach of children.)
- Scissors

Optional Tools

- Pennies, metal washers, or other small weights (see Step 105)

Printing Guidelines:

When printing with Adobe® Reader®, it is important to use proper printing settings for correct alignment and scaling. Click the Print Tool button. In the Print settings dialog box, set **Page Scaling** to **None**, and enable the **Auto-Rotate and Center** option. Unless you are a professional modeler, you should print on 8 ½ by 11 (U.S. Letter) sheets, and should not change the recommended print settings.

Instructions:

When printing these instructions, you should print on both sides of the sheets to save paper. You can also print in black & white to save color ink/toner. Some people prefer not to print, referencing the instructions from their computer monitor.

Model Parts:

This model has been designed for printing on every-day printer paper, so you’re ready print right away! However, some people prefer to print on cardstock of their choosing (each have their own preferences).

If you should need to re-print selective model parts, you can use the Snapshot Tool in Adobe® Reader®. Click the icon once, then click-drag a box around the area that you want to print. The selected area will flash once (a “snapshot”), and you’re ready to print. In the Print settings dialog box, you will see a preview of the document. In the preview, only the snapshot appears and will be printed. This saves you from printing the whole page, thus saving ink/toner.

Troubleshooting Files:

If you feel that the model parts are not printing properly, you can use the registration markers in the corners of the model part sheets. Hold two or more sheets to a light source, and compare both the position and sizes of the registration marks.

Sometimes PDF files can become corrupted while downloading. This is not uncommon, and is no cause for alarm. Delete the bad files, and try re-downloading them. Another common error is that your version of Adobe® Reader® is out-of-date. Please visit the Adobe® Web site and download the latest version of the software. This typically solves 90% of users’ file problems.

Construction Guidelines

Read these instructions and study the illustrations to know what/where to cut/fold. Before gluing, always dry-fit the pieces to ensure they fit properly. Be aware that paper will absorb moisture from watery glue, and it may expand.

When following these instructions, do not take the illustrations too literally. In many cases, pieces will be simplified (i.e. no tabs). Other times, pieces or entire sections may be missing that were previously displayed. This does not mean you should ever disassemble your model (unless instructed to do so).

Most model parts have numbered tabs. The numbers indicate which parts get glued to the tabs.

Model design ©2008 Robert Nava, The Disney Experience (www.disneyexperience.com). Any and all trademarks & copyrights are the properties of their respective owners. This fan-created model has been approved for public release by the Walt Disney Internet Group, and is not for sale or redistribution.

TEMPLE OF THE FORBIDDEN EYE

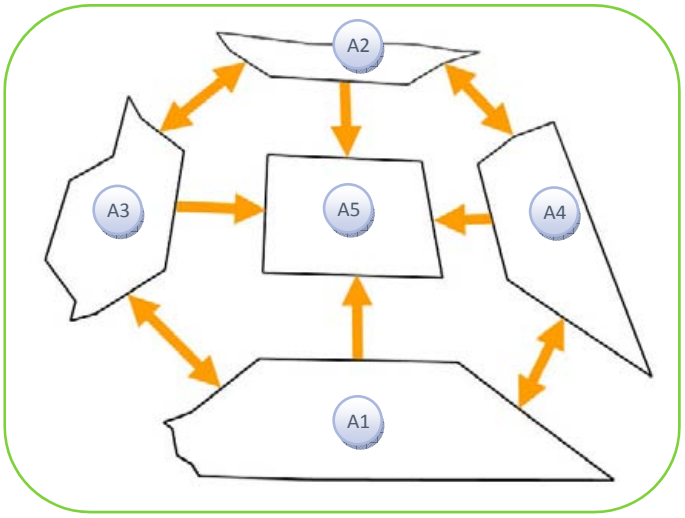

1. Assemble pieces A1-A5.

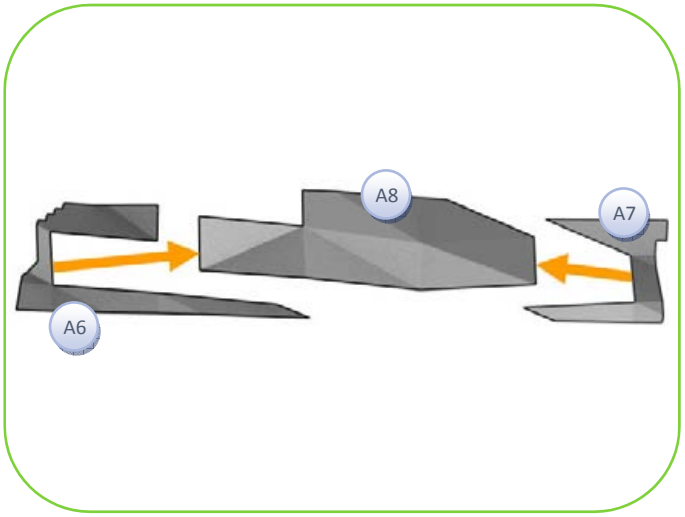

2. Assemble pieces A6-A8 as shown. There will be many pieces like these that will form irregular shapes. Do not worry about so much about the bulges; they represent exposed rock/stone, and should be irregular.

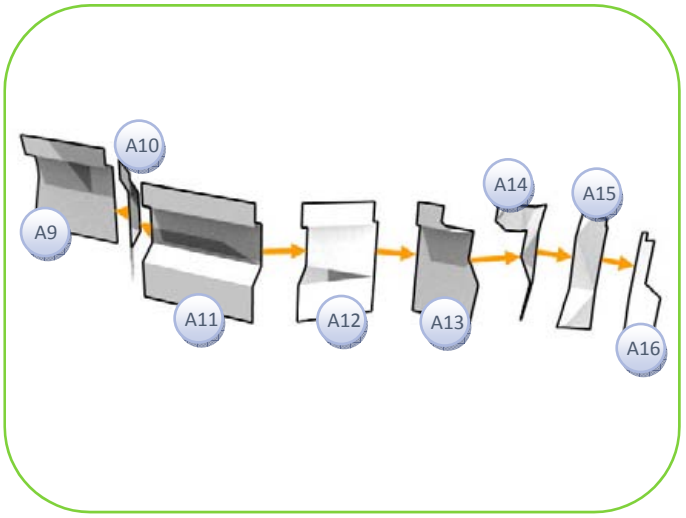

3. Assemble pieces A9-A16 as shown.

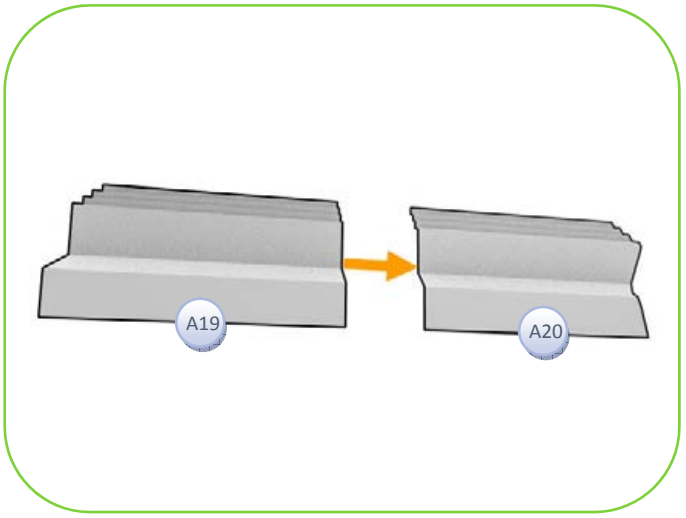

4. Glue pieces A19 & A20 together.

Model design ©2008 Robert Nava, The Disney Experience (www.disneyexperience.com). Any and all trademarks & copyrights are the properties of their respective owners. This fan-created model has been approved for public release by the Walt Disney Internet Group, and is not for sale or redistribution.

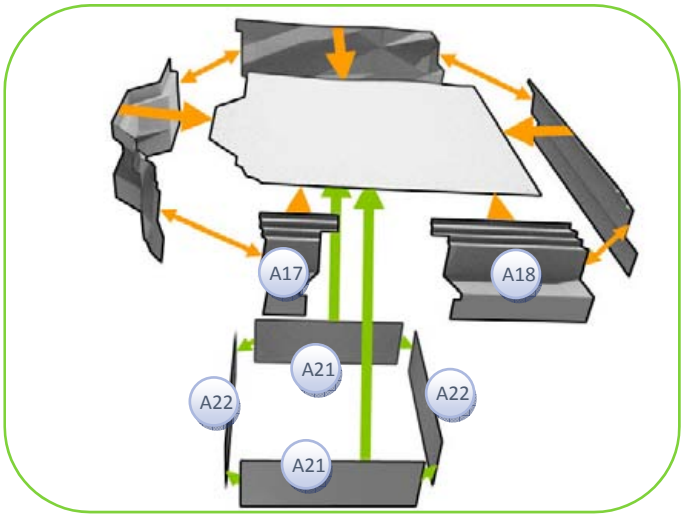

5. Glue the assemblies (and pieces A17 & A18) together to form the base assembly. Assemble pieces A21 & A22 to form a square, and then glue it to the underside of the base assembly. This will help support the weight of the temple.

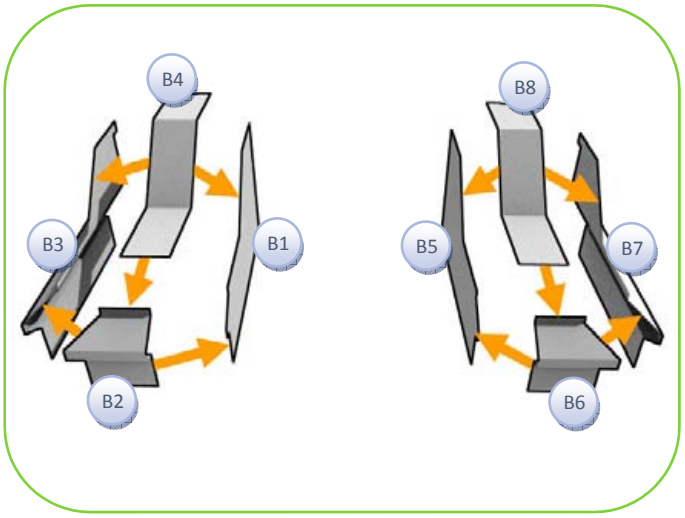

6. Glue pieces B1-B4 & B5-B8 together to form the sides of the stairway.

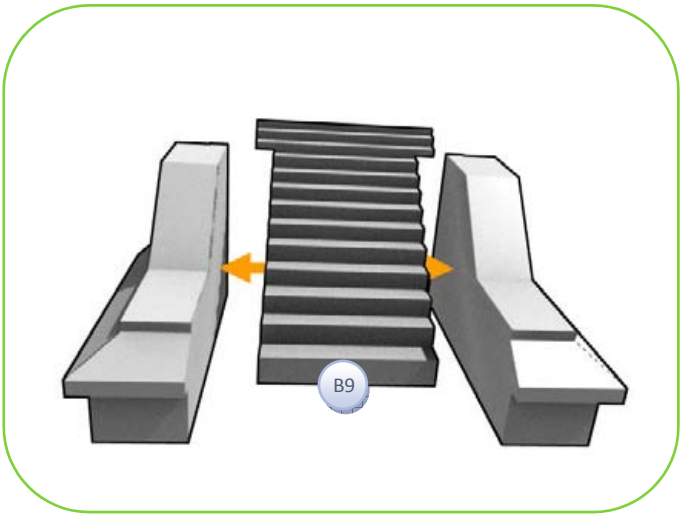

7. Fold piece B9 like an accordion, and glue it to the insides of the stairway assemblies.

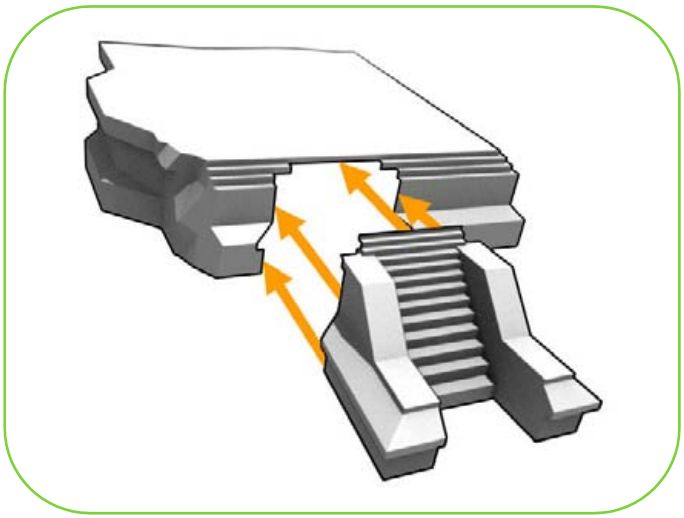

8. Glue the stairway assembly to the base assembly. Note that the stairway's top steps do not line up with the steps on the base. Do not worry about it.

Model design ©2008 Robert Nava, The Disney Experience (www.disneyexperience.com). Any and all trademarks & copyrights are the properties of their respective owners. This fan-created model has been approved for public release by the Walt Disney Internet Group, and is not for sale or redistribution.

TEMPLE OF THE FORBIDDEN EYE

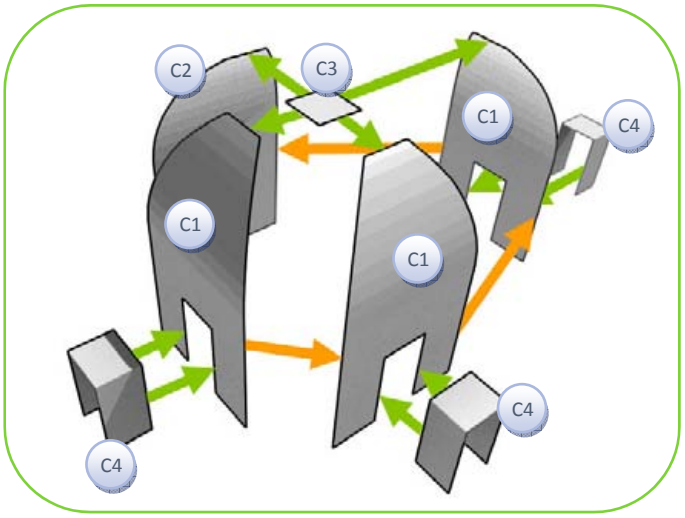

9. Assemble pieces C1-C3 as shown, printed sides facing inward.
10. Glue pieces C4 (printed sides facing inward) to pieces C1 as shown.

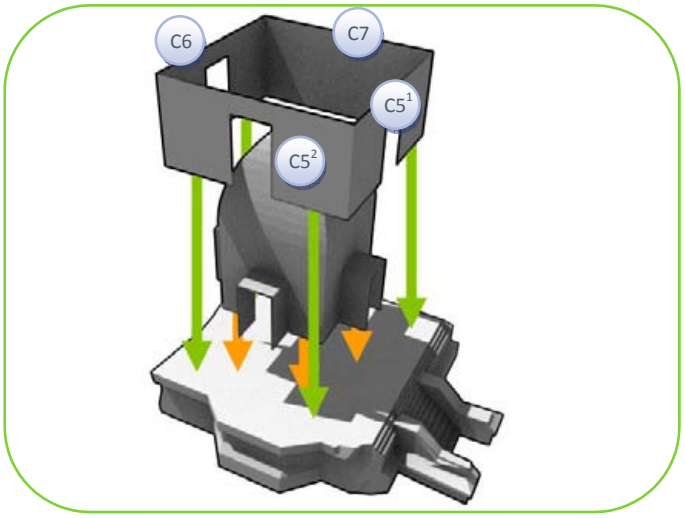

11. Glue the inner chamber assembly to the base assembly.
12. Glue pieces $C5^1$-C7 (printed sides facing outward) to form the walls of the chamber. Piece $C5^1$ is the front of the temple (entrance), and piece C6 is the rear of the temple.
13. Glue the outer chamber walls to the base assembly. Then carefully glue the walls to the archways.

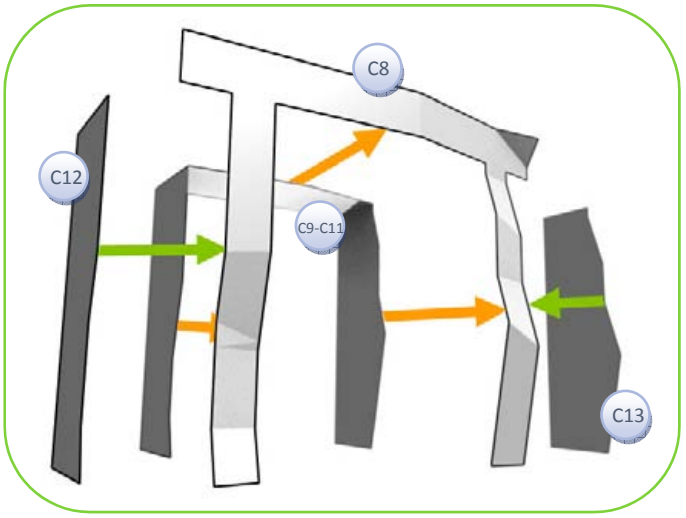

14. Glue pieces C9-C11 to form the inner archway (printed sides facing inward).
15. Glue pieces C8-C13 together as shown.

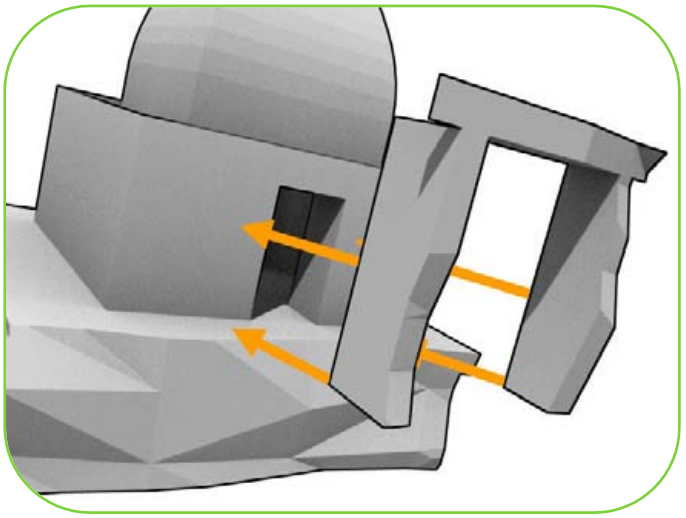

16. Glue the rear archway assembly to the back of the temple.

Model design ©2008 Robert Nava, The Disney Experience (www.disneyexperience.com). Any and all trademarks & copyrights are the properties of their respective owners. This fan-created model has been approved for public release by the Walt Disney Internet Group, and is not for sale or redistribution.

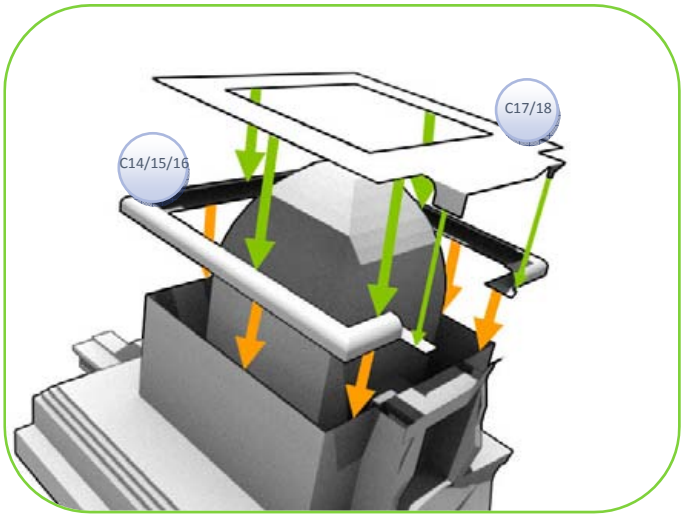

17. Glue pieces C14-C16 together to form the first temple lip, then glue it to the temple walls as shown. Note that a small portion is also glued to the temple's rear archway.
18. Glue pieces C17 & C18 together, and glue them to the top of the lip assembly as shown. Note that a small portion is also glued to the temple's rear archway.

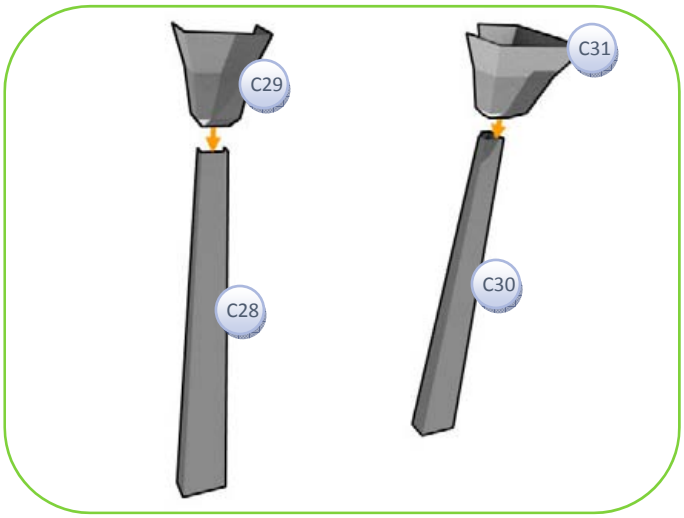

19. Glue pieces C28 & C29 together to form the wall pillars.
20. Glue pieces C30 & C31 together to form the corner wall pillars.

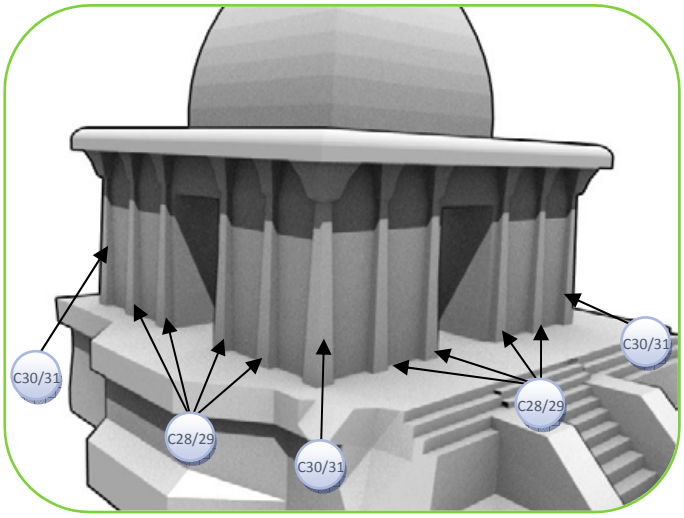

21. Glue the pillars to the sides and corners of the temple's walls as shown.

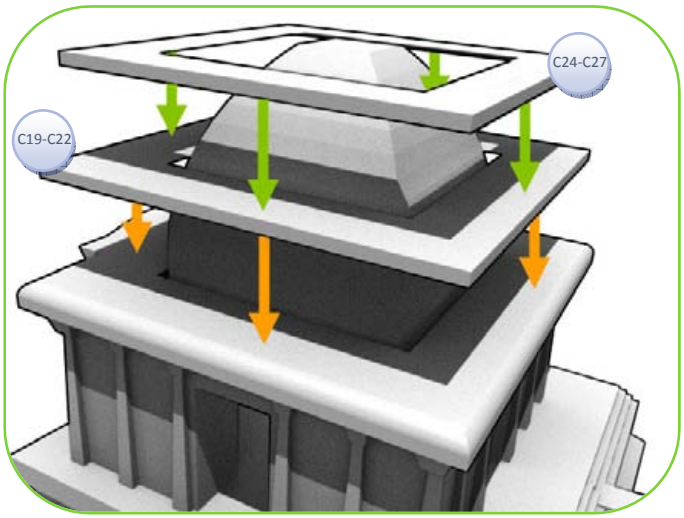

22. Glue pieces C19-C22 together and glue to the top of the lip assembly as shown. Note the labels on the lip assembly to align the parts just right (a certain side faces the front of the temple).
23. Glue pieces C24-C27 together and glue to the top of pieces C19-C22 as shown. The blank areas should line up.

Model design ©2008 Robert Nava, The Disney Experience (www.disneyexperience.com). Any and all trademarks & copyrights are the properties of their respective owners. This fan-created model has been approved for public release by the Walt Disney Internet Group, and is not for sale or redistribution.

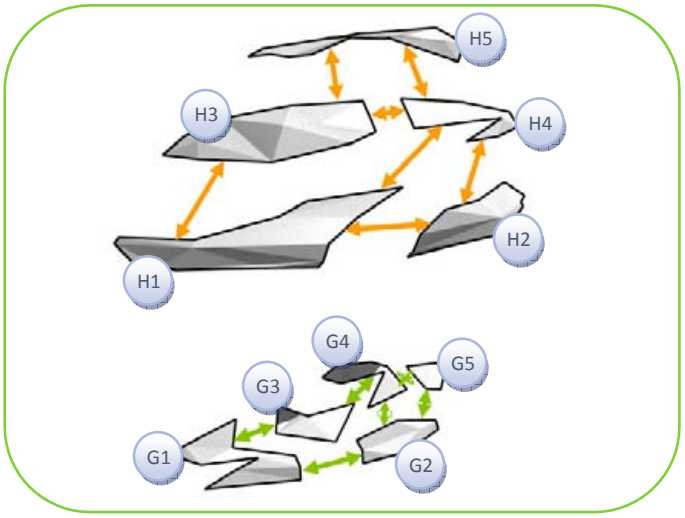

24. Glue pieces H1-H5 to their selves before gluing them to each other as shown. The final shape should be convex (bulges outward).
25. Glue pieces G1-G5 together as shown. The final shape should be convex (bulges outward).

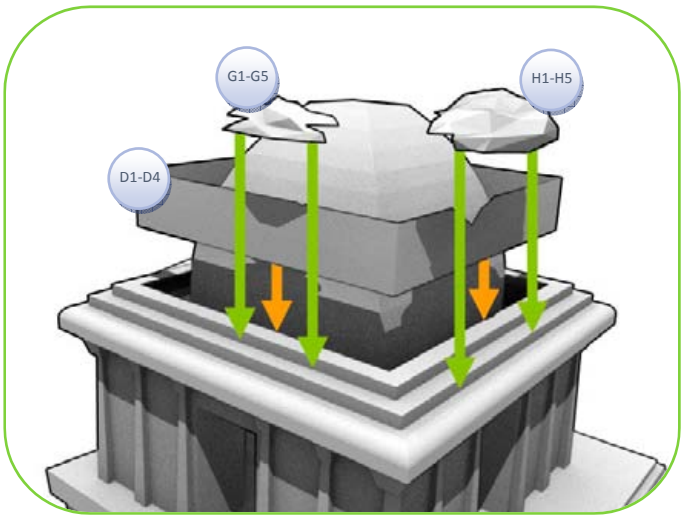

26. Glue pieces D1-D4 together, and glue to the top of the temple as shown. Note that the larger notch faces the front of the temple.
27. Glue the rubble assemblies to their respective locations on top of the temple. Do not try to glue them all at once. Instead, glue them on one tab at a time.

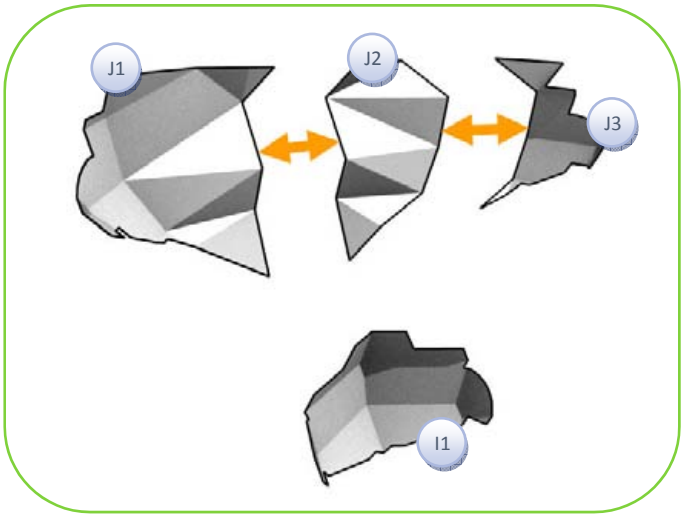

28. Glue piece J1 to itself, then glue pieces J1-J3 together as shown. The final shape should be concave (bulges inward).
29. Glue piece I1 to itself as shown. The final shape should be concave (bulges inward).

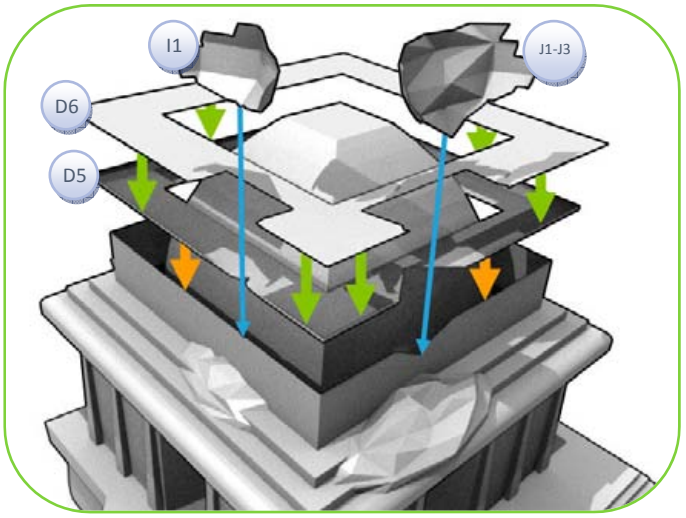

30. Glue the two rubble assemblies to their respective locations inside of pieces D1 & D2.
31. Assemble piece D5 (printed side facing outward), then glue it to piece D6. Glue the new lip assembly (face down) to the top of the temple walls as shown.
32. When dry, fiddle with the rubble assemblies to fit and glue to the insides of pieces D5 & D6.

Model design ©2008 Robert Nava, The Disney Experience (www.disneyexperience.com). Any and all trademarks & copyrights are the properties of their respective owners. This fan-created model has been approved for public release by the Walt Disney Internet Group, and is not for sale or redistribution.

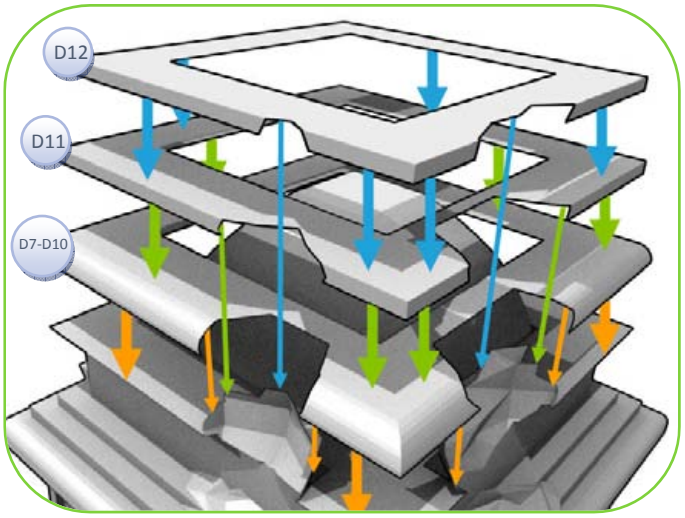

33. Glue pieces D7-D10 together, then glue to piece D6 as shown.
34. Assemble piece D11, and glue it to the top of pieces D7-D10 as shown.
35. Assemble piece D12, and glue it to the top of piece D11 as shown. When dry, fiddle with the rubble assemblies to fit and glue to the insides of pieces D7-D12.

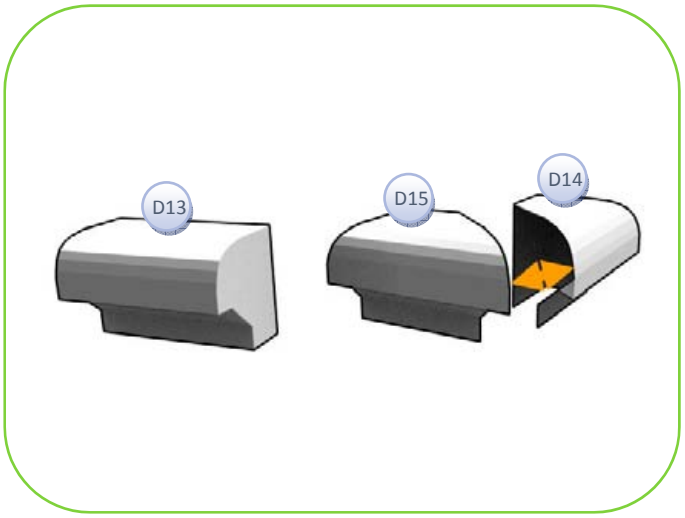

36. Assemble pieces D13 as shown.
37. Assemble and glue pieces D14 & D15 together as shown.

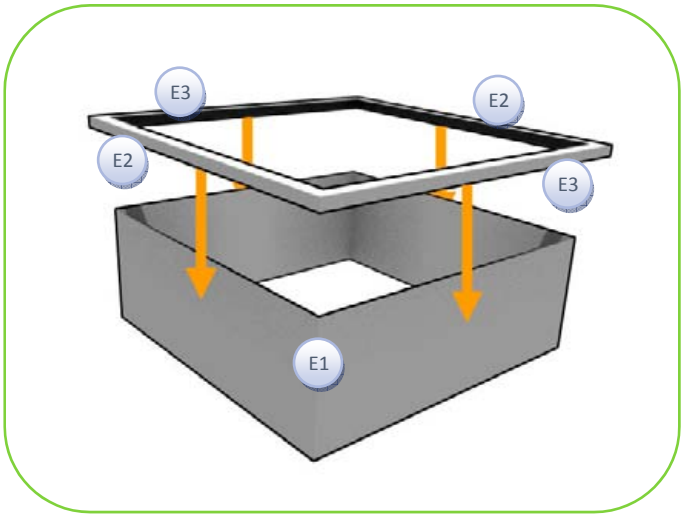

38. Glue pieces E1 to each other.
39. Glue pieces E2 & E3 each other. When dry, slide pieces E2/E3 over pieces E1 and glue into place.

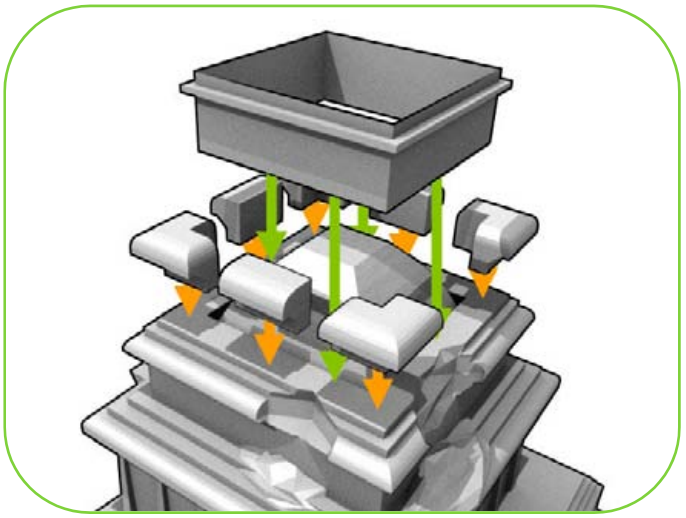

40. Glue the wall assembly to piece D12.
41. Glue pieces D13-D15 to the top of piece D12 as shown.

Model design ©2008 Robert Nava, The Disney Experience (www.disneyexperience.com). Any and all trademarks & copyrights are the properties of their respective owners. This fan-created model has been approved for public release by the Walt Disney Internet Group, and is not for sale or redistribution.

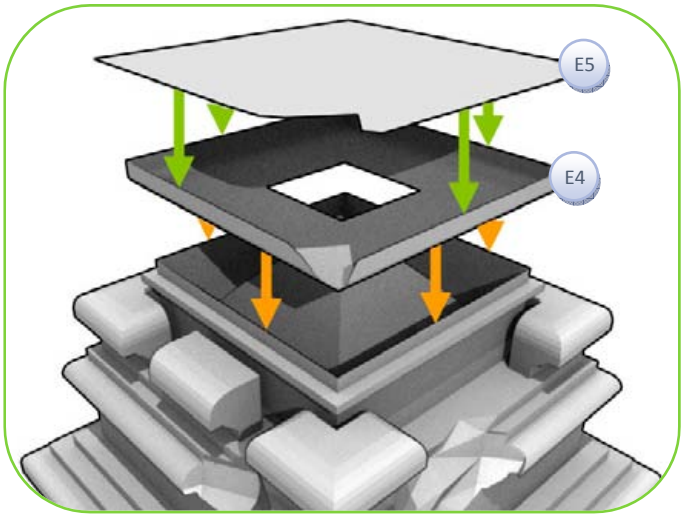

42. Assemble piece E4, then glue it to piece E5. Flip the assembly upside down, and glue to the top of the temple as shown.

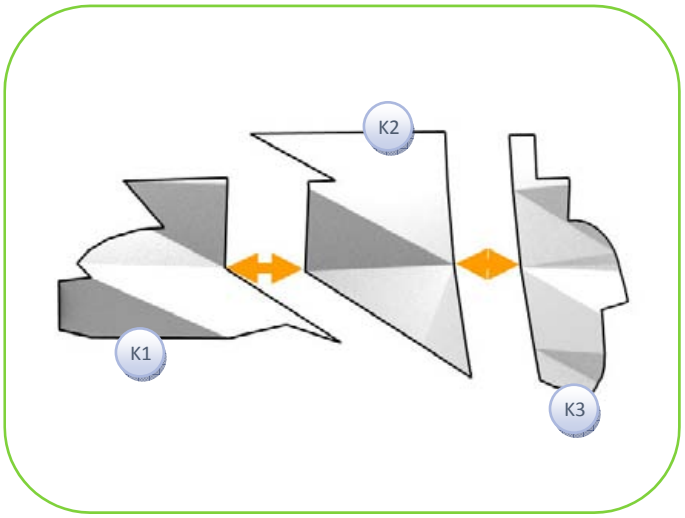

43. Glue pieces K1-K3 together as shown.

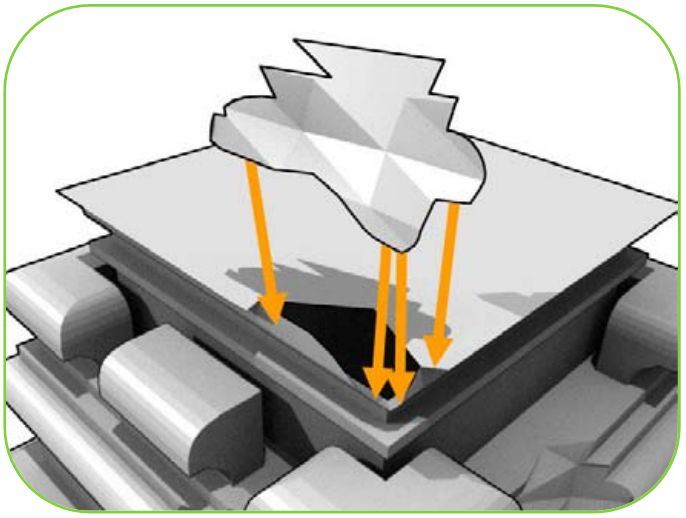

44. Glue the rubble assembly to the insides of pieces E4 & E5. You may have to fiddle with it to get it just right.

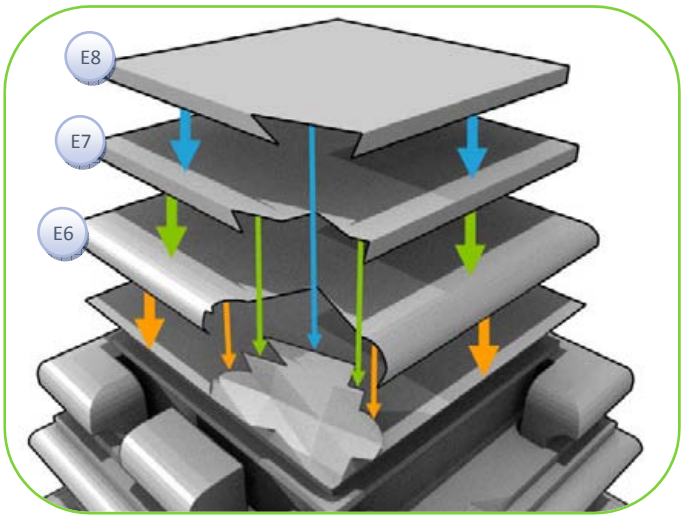

45. Assemble piece E6, and glue to piece E5 as shown.
46. Assemble piece E7, and glue to the top of piece E6 as shown.
47. Assemble piece E8, and glue to the top of piece E7as shown. When dry, fiddle with the rubble assembly to fit and glue to the insides of pieces E6-E8.

Model design ©2008 Robert Nava, The Disney Experience (www.disneyexperience.com). Any and all trademarks & copyrights are the properties of their respective owners. This fan-created model has been approved for public release by the Walt Disney Internet Group, and is not for sale or redistribution.

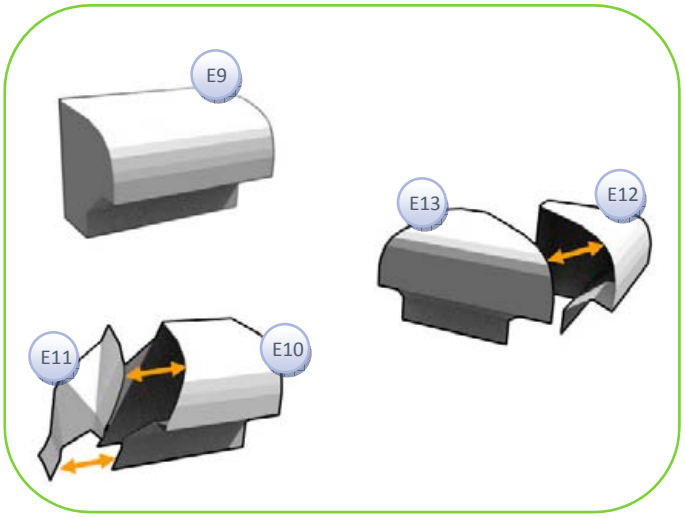

48. Assemble pieces E9 as shown.
49. Assemble and glue pieces E10 & E11 as shown.
50. Assemble and glue pieces E12 & E13 as shown.

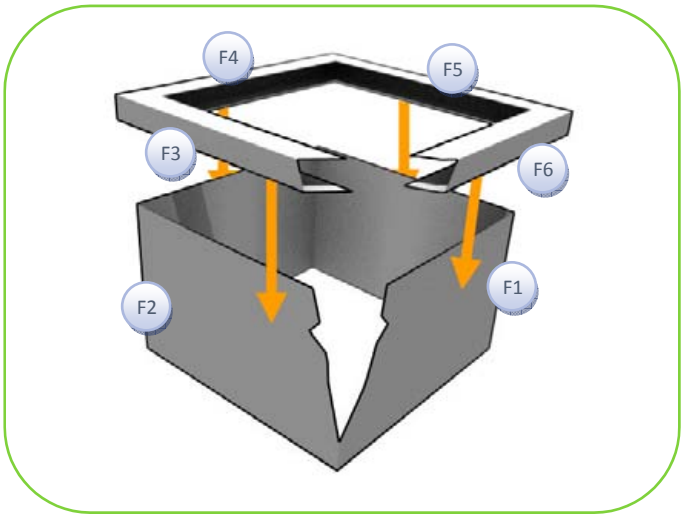

51. Glue pieces F1 & F2 together.
52. Glue pieces F3-F6 together. When dry, slide the pieces over the wall assembly and glue into place.

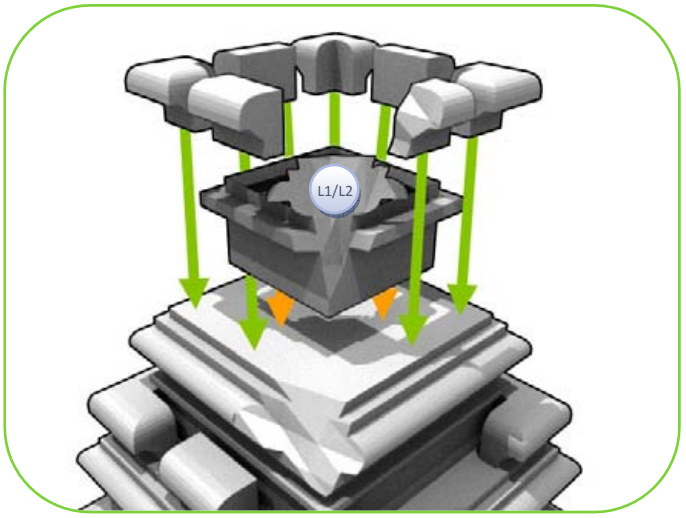

53. Glue pieces L1 & L2 together. Glue the rubble assembly to the inside of the wall assembly.
54. Glue the wall assembly to the top of the temple as shown.
55. Glue pieces E9-E13 to the top of the temple as shown.

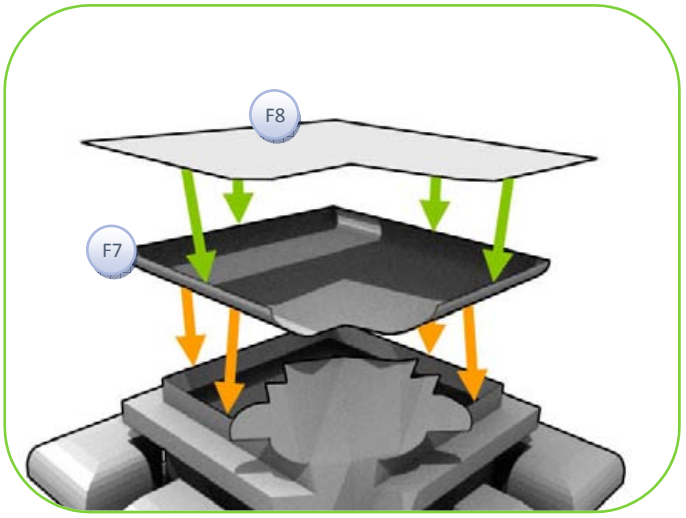

56. Assemble piece F7, and glue to piece F8. Flip the assembly upside down, and glue to the top of the temple as shown.

Model design ©2008 Robert Nava, The Disney Experience (www.disneyexperience.com). Any and all trademarks & copyrights are the properties of their respective owners. This fan-created model has been approved for public release by the Walt Disney Internet Group, and is not for sale or redistribution.

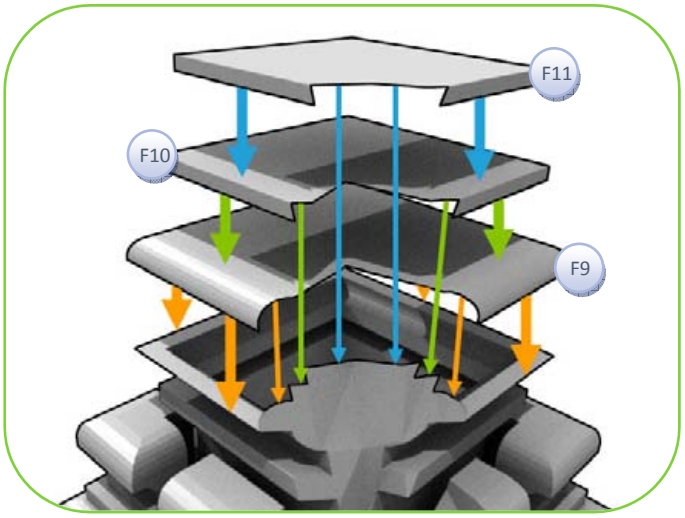

57. Assemble piece F9, and glue it to piece F8 as shown.
58. Assemble piece F10, and glue it to piece F9 as shown.
59. Assemble piece F11, and glue it to piece F10 as shown. When dry, fiddle with the rubble assembly to fit and glue to the insides of pieces F9-F11.

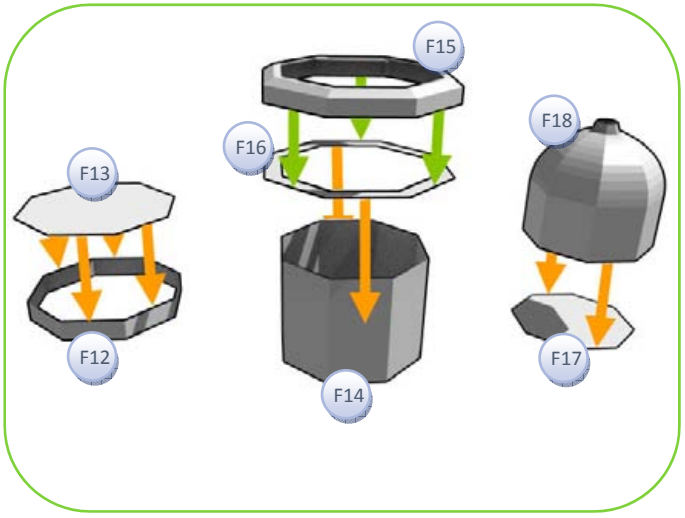

60. Glue piece F12 to itself, then glue to the underside of piece F13 as shown.
61. Glue piece F14 to itself.
62. Assemble piece F15 as shown, then glue the bottom to the unprinted side of piece F16. Slide the ring over piece F14, and glue into place.
63. Assemble piece F18 as shown, and glue to the unprinted side of piece F17.

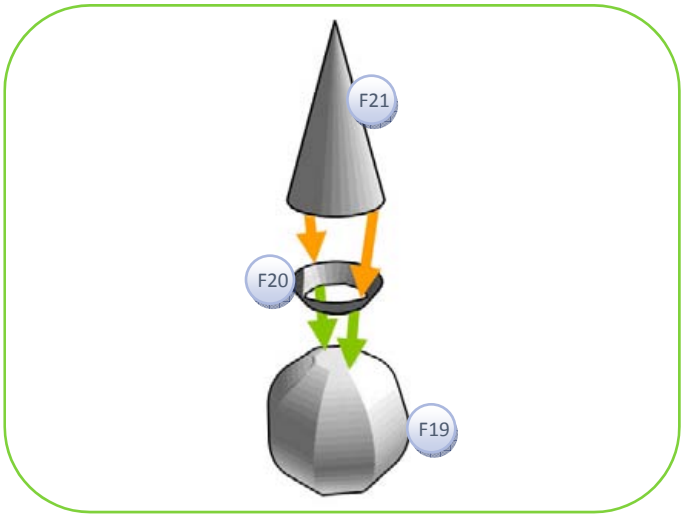

64. Assemble pieces F19-F21, then glue together as shown.



65. Glue the assemblies together as shown . . .



66. . . . then glue them to the top of the temple.

Model design ©2008 Robert Nava, The Disney Experience (www.disneyexperience.com). Any and all trademarks & copyrights are the properties of their respective owners. This fan-created model has been approved for public release by the Walt Disney Internet Group, and is not for sale or redistribution.

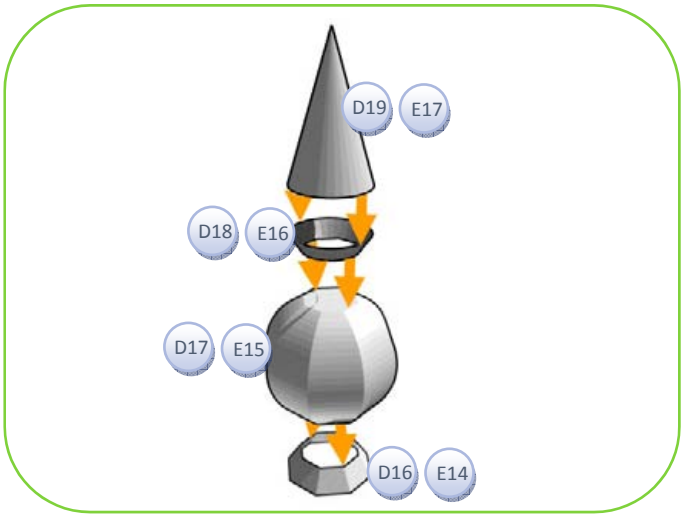

67. Assemble pieces D16-D19, then glue together as shown.
68. Assemble pieces E14-E17, then glue together as shown.

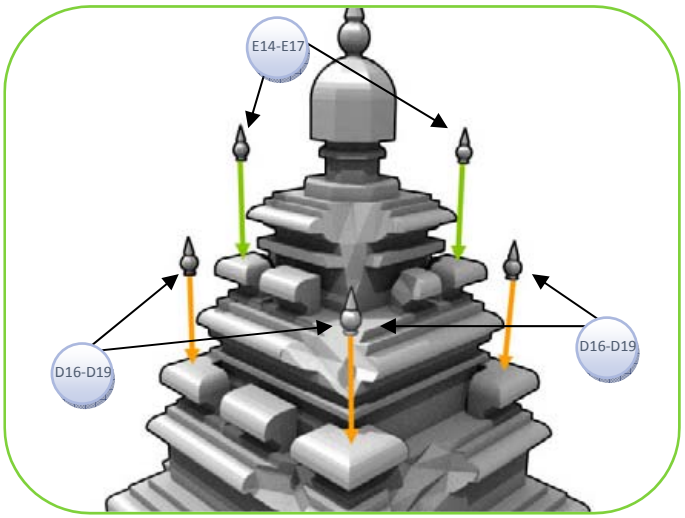

69. Glue the smaller finials to the upper levels of the temple as shown.
70. Glue the larger finials to the lower levels of the temple as shown.

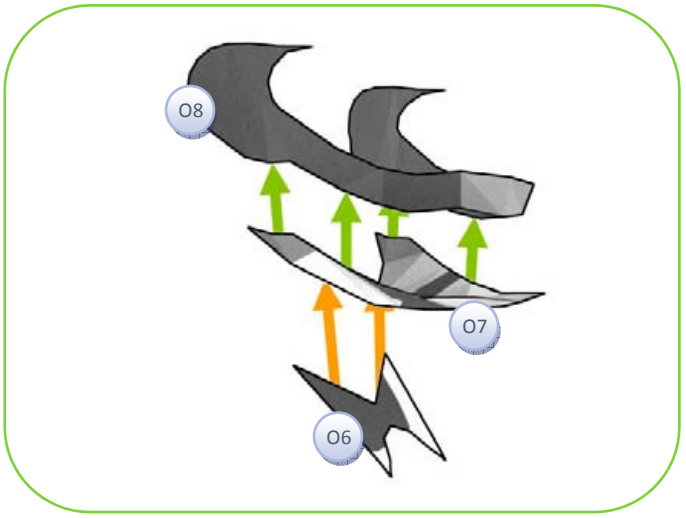

71. The following instructions are for assembling two snake heads. Glue piece O7 to itself.
72. Glue pieces O6-O8 together as shown.

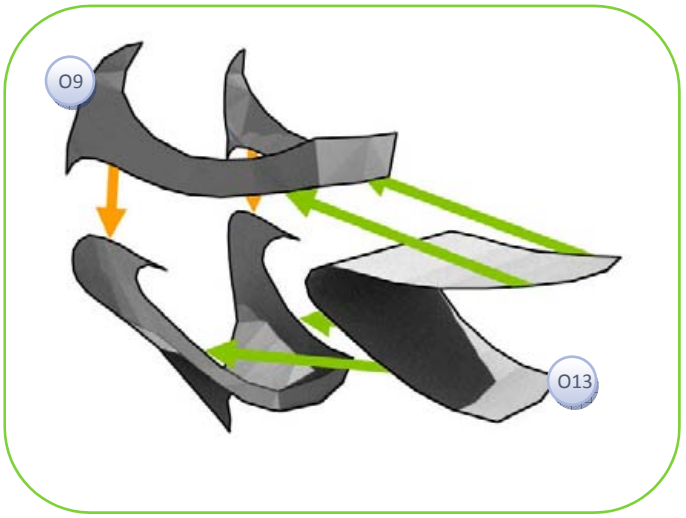

73. Glue piece O9 to piece O8.
74. Glue piece O13 to the inside of pieces O8 & O9.

Model design ©2008 Robert Nava, The Disney Experience (www.disneyexperience.com). Any and all trademarks & copyrights are the properties of their respective owners. This fan-created model has been approved for public release by the Walt Disney Internet Group, and is not for sale or redistribution.

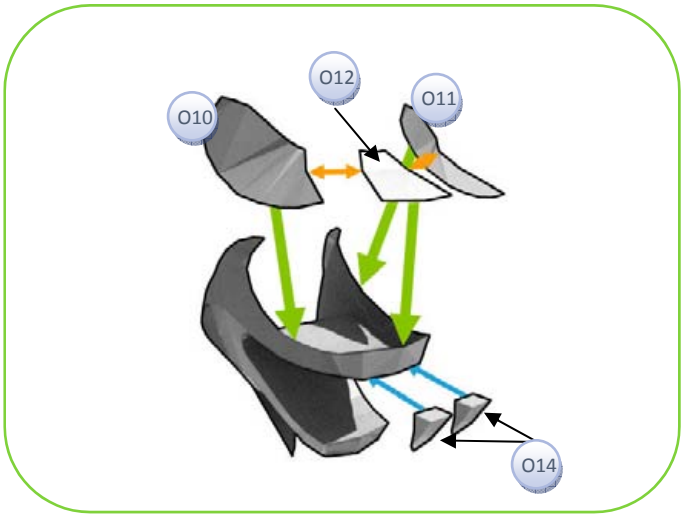

75. Glue pieces O10-O12, then glue to piece O9.
76. Assemble pieces O14, and glue them to the inside of the mouth as shown.

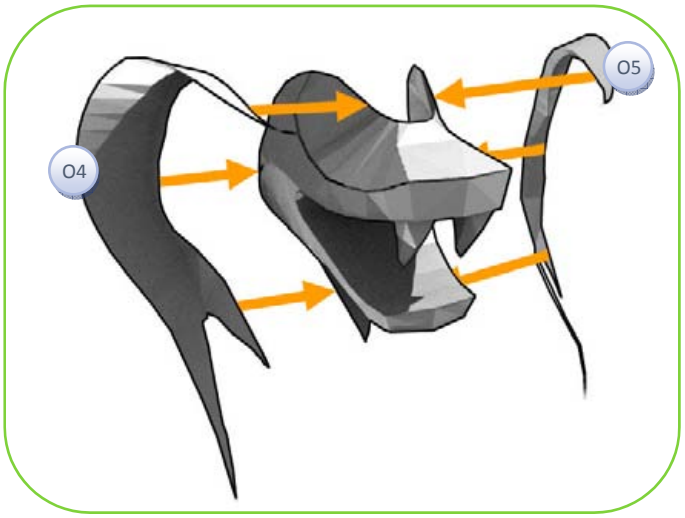

77. Assemble pieces O4 & O5, and glue to the sides of the head as shown. Start from the bottom and slowly work your way up.

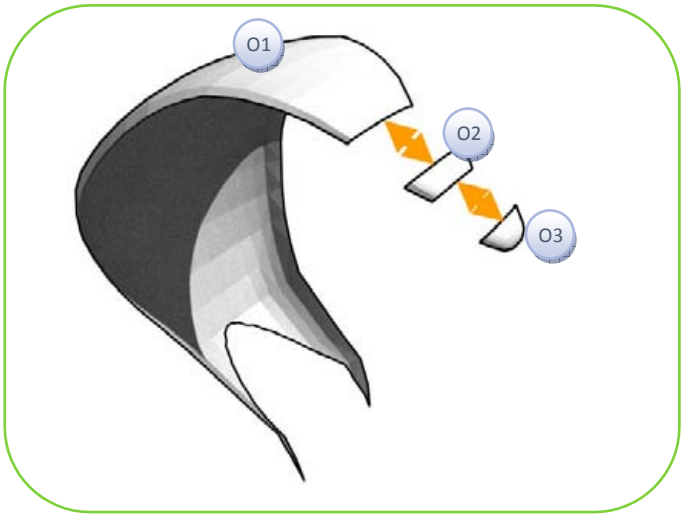

78. Assemble piece O1, and glue to piece O2 & O3 as shown.



79. Glue the assembly to the rest of the head. Begin with the front, top and slowly work your way down each side of pieces O4 & O5. When finished, you should have two complete snake heads.

Model design ©2008 Robert Nava, The Disney Experience (www.disneyexperience.com). Any and all trademarks & copyrights are the properties of their respective owners. This fan-created model has been approved for public release by the Walt Disney Internet Group, and is not for sale or redistribution.

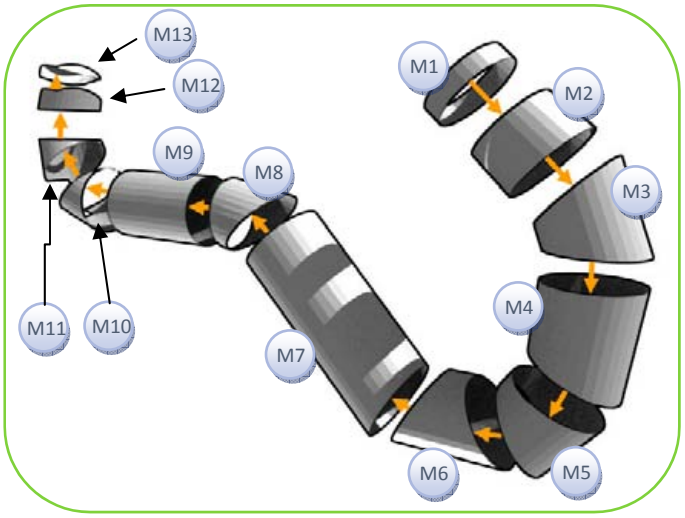

80. Assemble and glue pieces M1-M5 together as shown. Make sure that the glue seams line up.
81. Assemble and glue pieces M6-M9 together as shown. Make sure that the glue seams line up.
82. Assemble and glue pieces M10-M13 together as shown. Make sure that the glue seams line up.
83. Glue the three body sections together to create one body assembly. The seams will not line up.

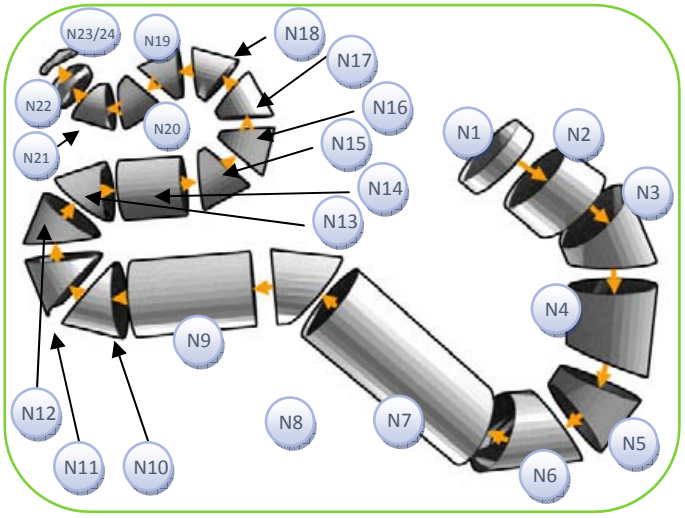

84. Assemble and glue pieces N1-N5 together as shown. Make sure that the glue seams line up.
85. Assemble and glue pieces N6-N9 together as shown. Make sure that the glue seams line up.
86. Assemble and glue pieces N10-N14 together as shown. Make sure that the glue seams line up.
87. Assemble and glue pieces N15-N24 together as shown. Make sure that the glue seams line up.
88. Glue the three body sections together to create one body assembly. The seams will not line up.

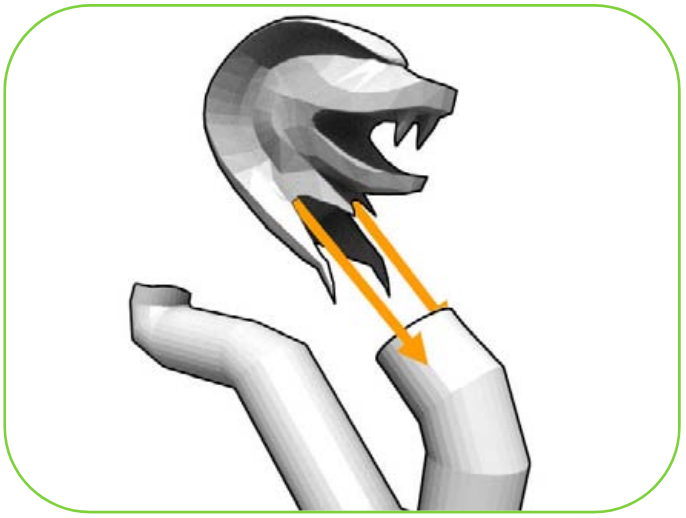

89. Glue the snake head assemblies over the body assemblies as shown.

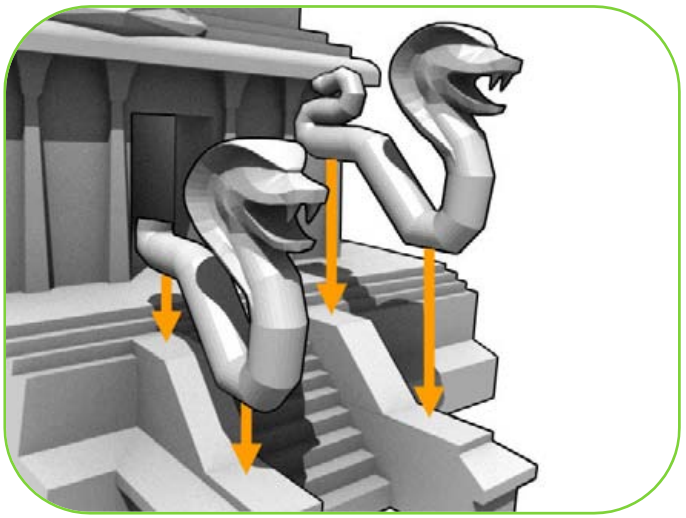

90. Glue the snake statues to the tops of the stairway as shown.

Model design ©2008 Robert Nava, The Disney Experience (www.disneyexperience.com). Any and all trademarks & copyrights are the properties of their respective owners. This fan-created model has been approved for public release by the Walt Disney Internet Group, and is not for sale or redistribution.

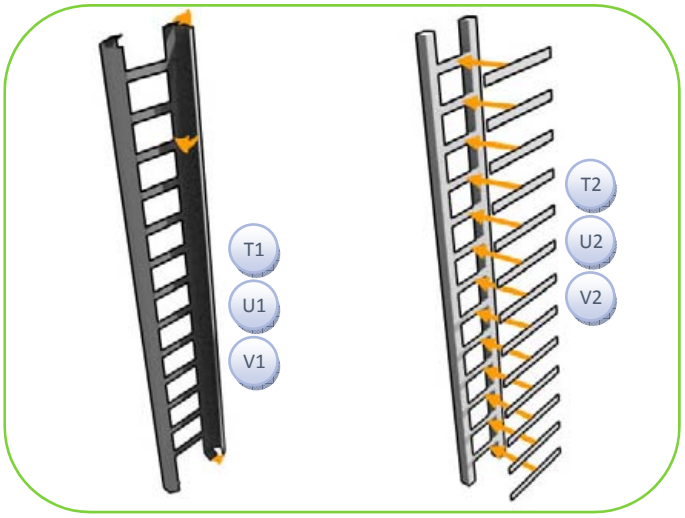

91. Assemble pieces T1, U1, & V1 as shown.
92. Glue pieces T2, U2, & V2 to pieces T1, U1, & V1 as shown.

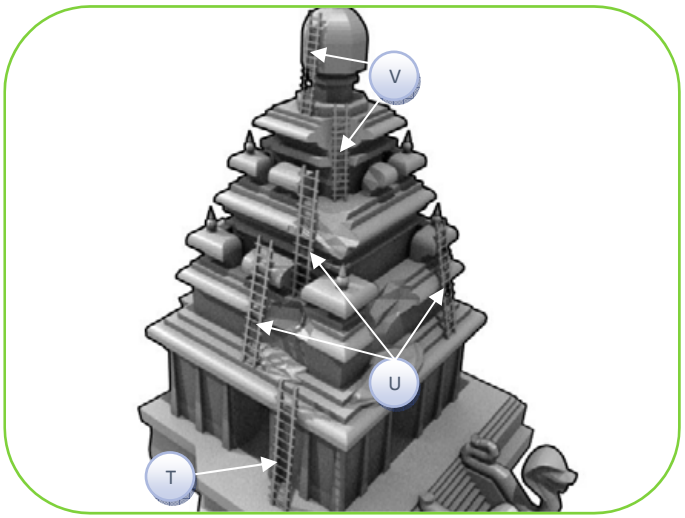

93. Place the ladders onto the temple as shown.

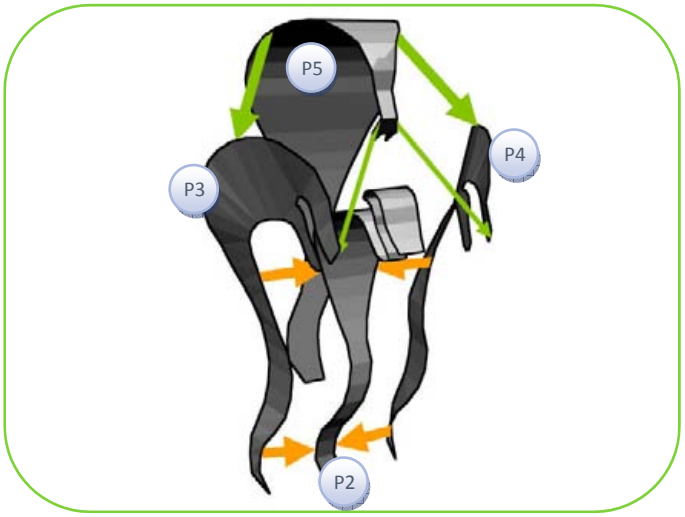

94. Glue pieces P2-P5 together as shown. Take your time! These pieces are small and harder to assemble.

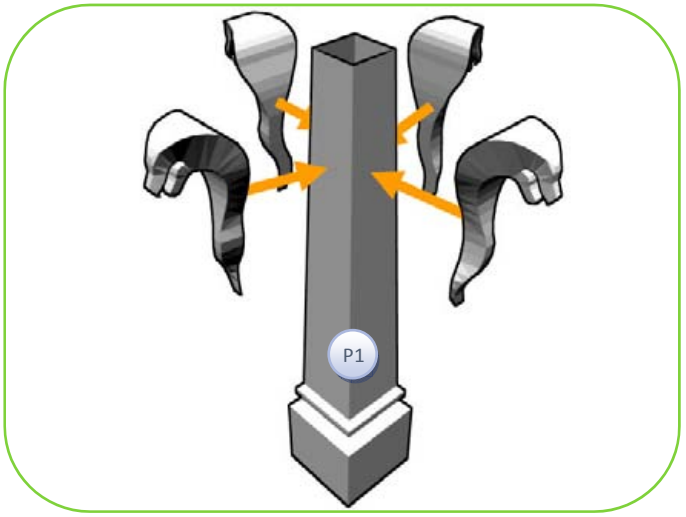

95. Assemble pieces P1, and glue the snake assemblies to the four sides of each pillar.

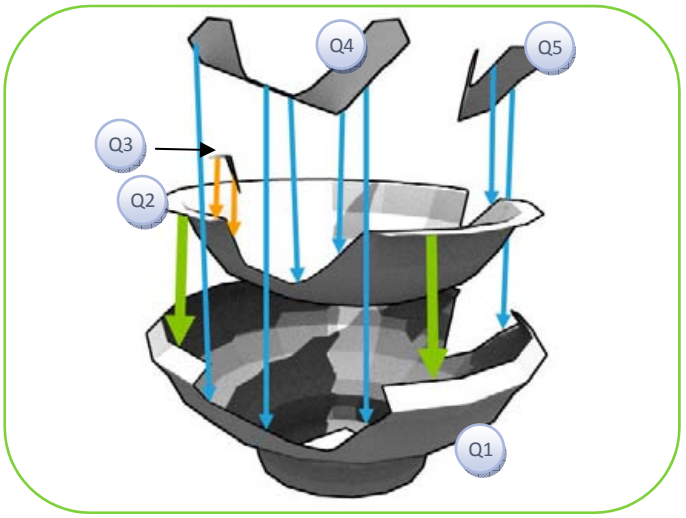

96. Assemble piece Q1 as shown (printed side facing outward).
97. Assemble and glue pieces Q2 & Q3 as shown (printed sides facing inward). When sufficiently dry, glue the inner bowl assembly to the top lip of the outer bowl assembly.
98. Glue pieces Q4 & Q5 to their respective locations.

Model design ©2008 Robert Nava, The Disney Experience (www.disneyexperience.com). Any and all trademarks & copyrights are the properties of their respective owners. This fan-created model has been approved for public release by the Walt Disney Internet Group, and is not for sale or redistribution.

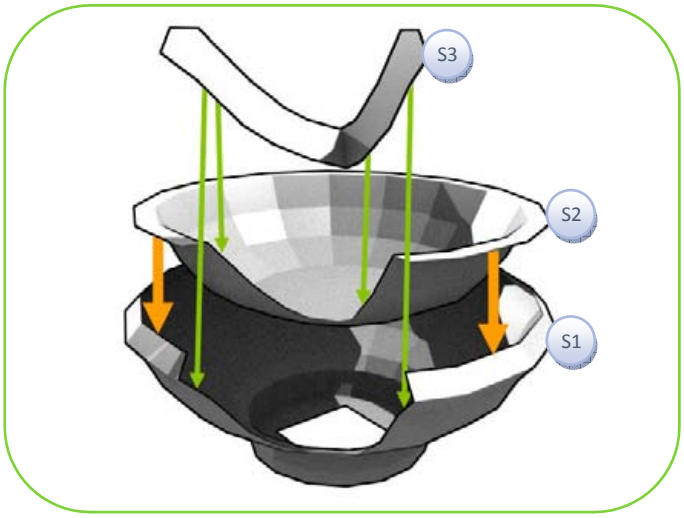

99. Assemble piece S1 as shown (printed side facing outward).
100. Assemble piece S2 as shown (printed sides facing inward). When sufficiently dry, glue the inner bowl assembly to the top lip of the outer bowl assembly.
101. Glue piece S3 in place as shown.

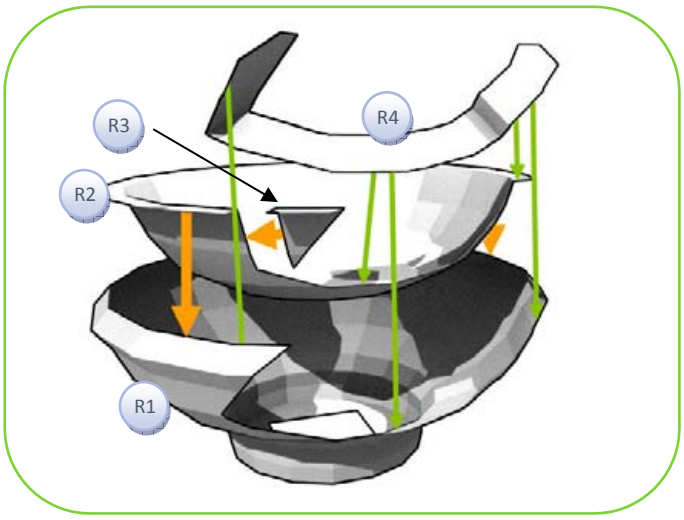

102. Assemble piece R1 as shown (printed side facing outward).
103. Assemble and glue pieces R2 & R3 as shown (printed sides facing inward). When sufficiently dry, glue the inner bowl assembly to the top lip of the outer bowl assembly.
104. Glue piece R4 in place as shown.



105. Because the snake columns are tall, narrow, and top-heavy, you may want to add small weights (i.e. pennies or metal washers) to the inside.
106. Glue the bowl assemblies over the ends of the snake columns as shown. They should fit until the bottom of the inner bowl meets the top of the column. You may need to apply pressure to force the snakes out of the way.
107. Line up the columns into two rows of three in front of the temple (see photo).

Congratulations; you've completed the model!

Model design ©2008 Robert Nava, The Disney Experience (www.disneyexperience.com). Any and all trademarks & copyrights are the properties of their respective owners. This fan-created model has been approved for public release by the Walt Disney Internet Group, and is not for sale or redistribution.