

Space Sheriff Gavan (宇宙刑事ギャバン Uchū Keiji Gyaban?) is the first of the Metal Hero Series. It aired on TV Asahi from March 5, 1982 through February 25, 1983.

# SILVER

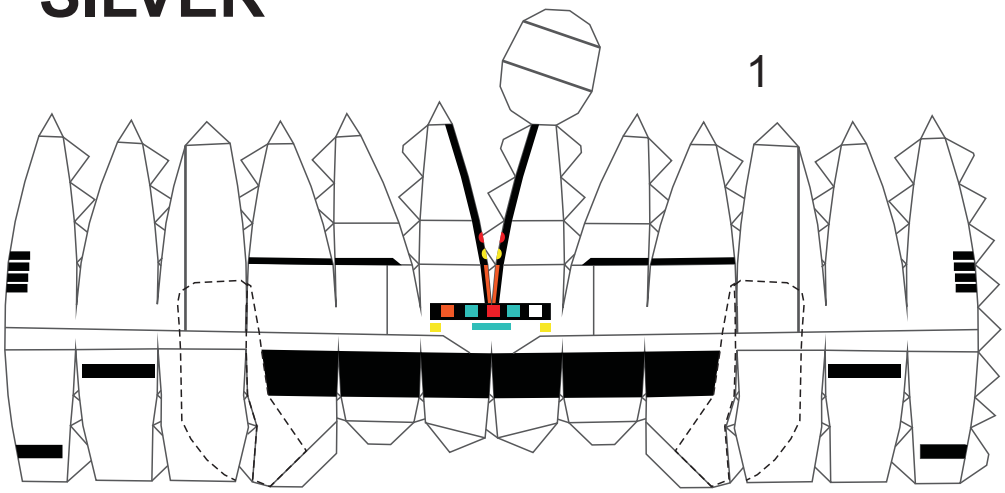


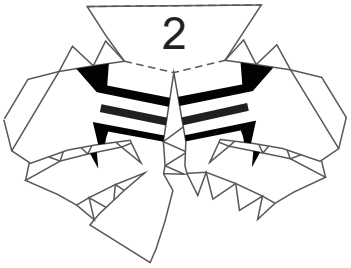


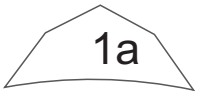


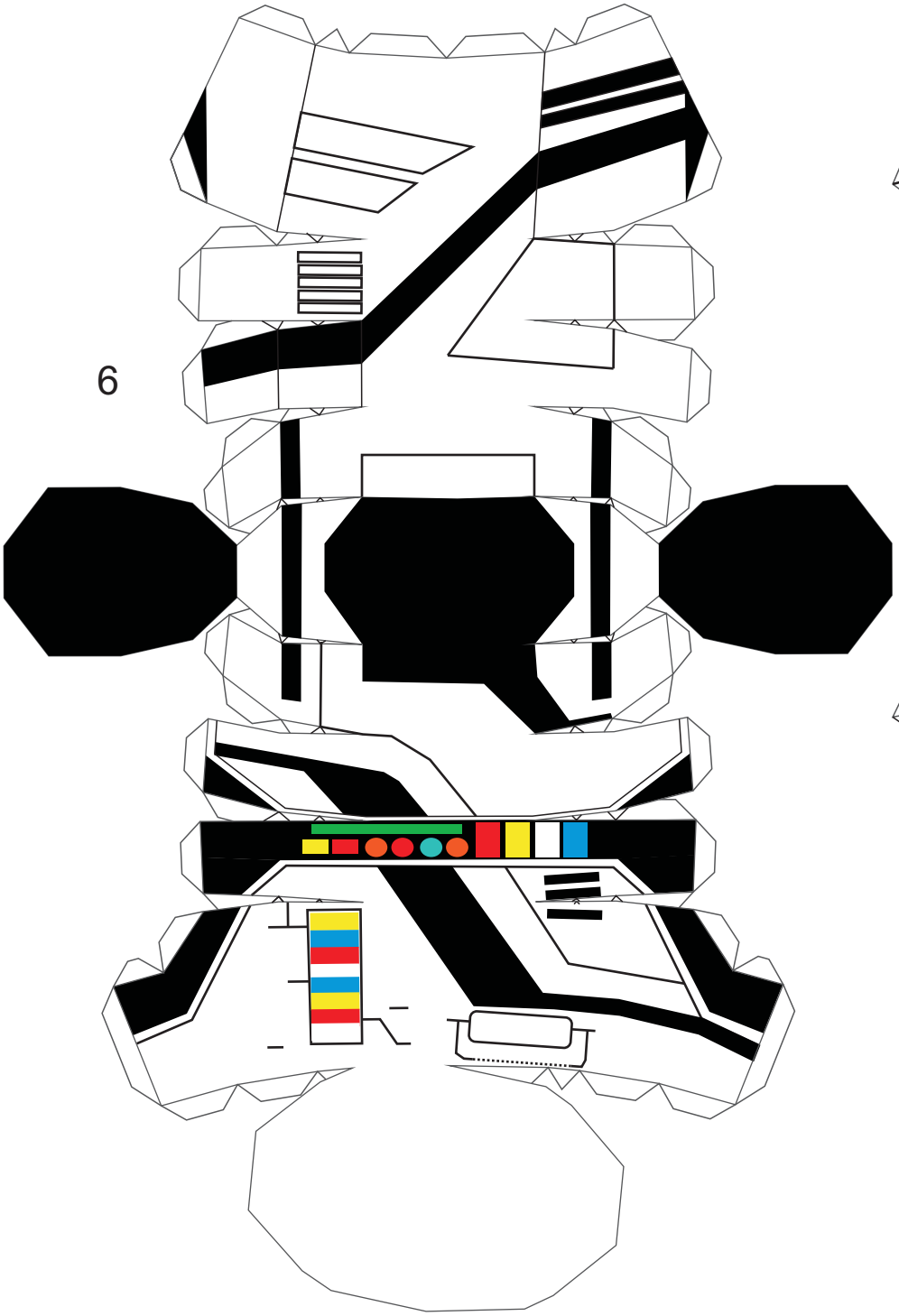


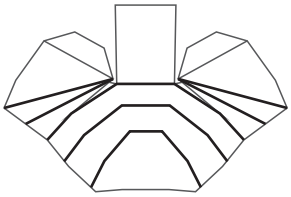





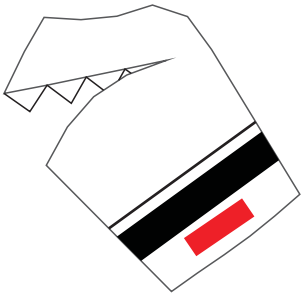

# SILVER

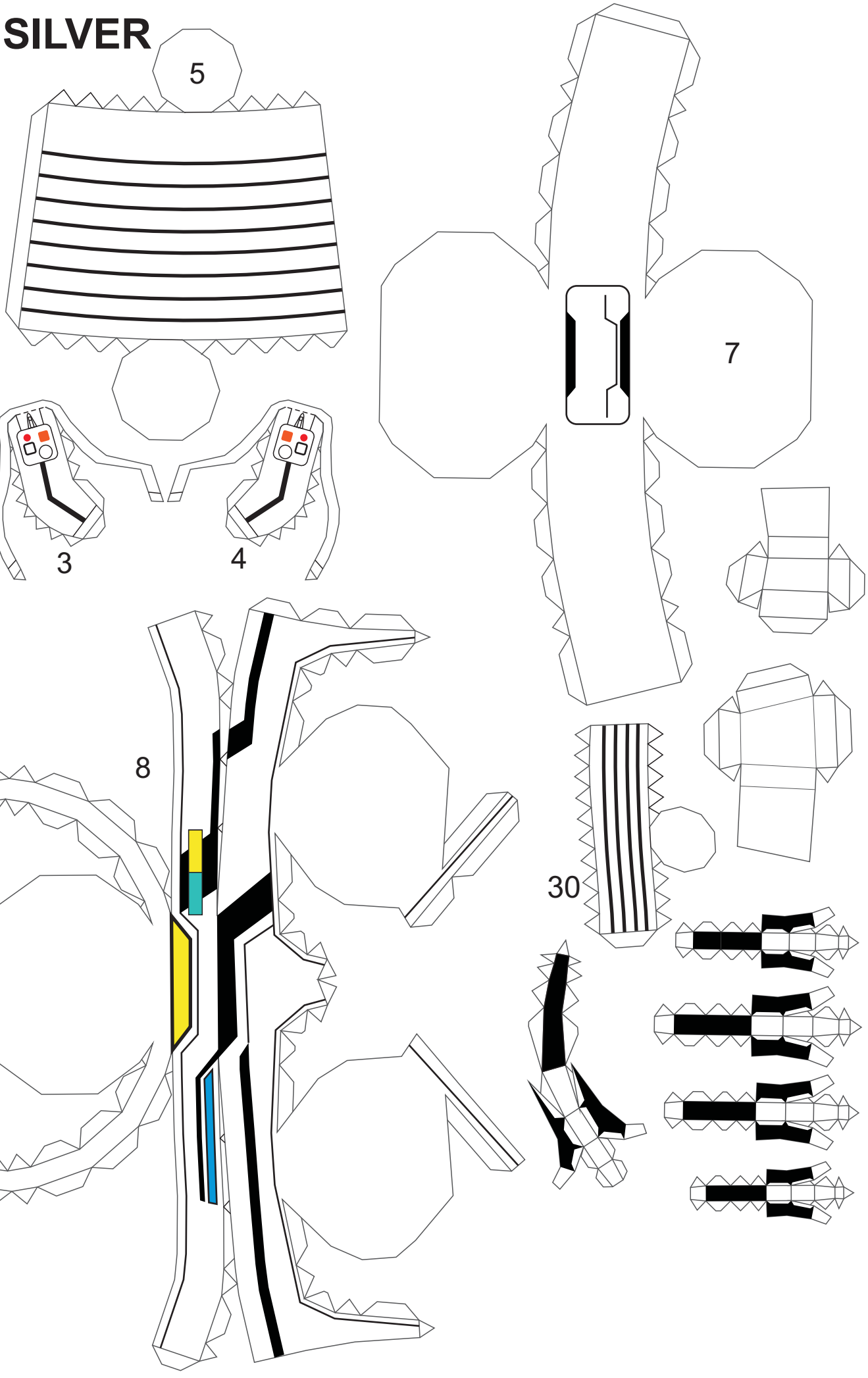

# SILVER

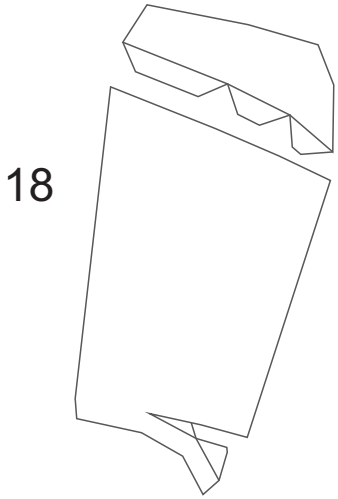


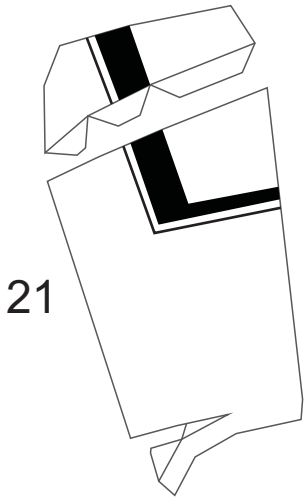


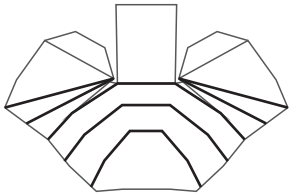



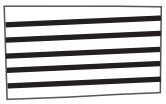


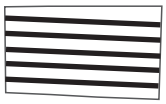




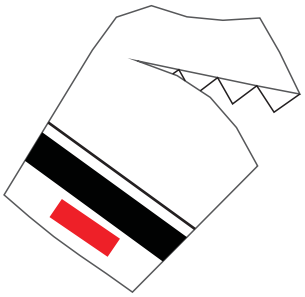

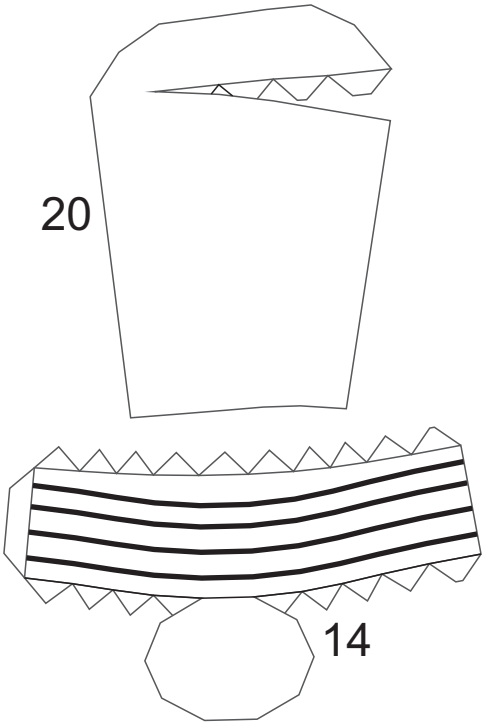


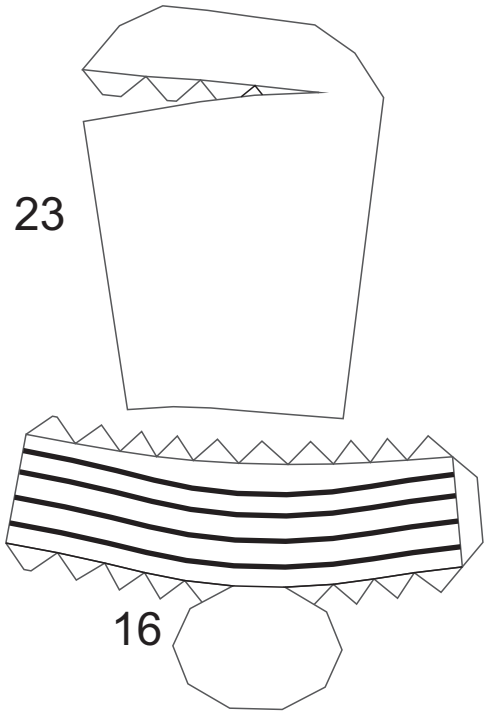


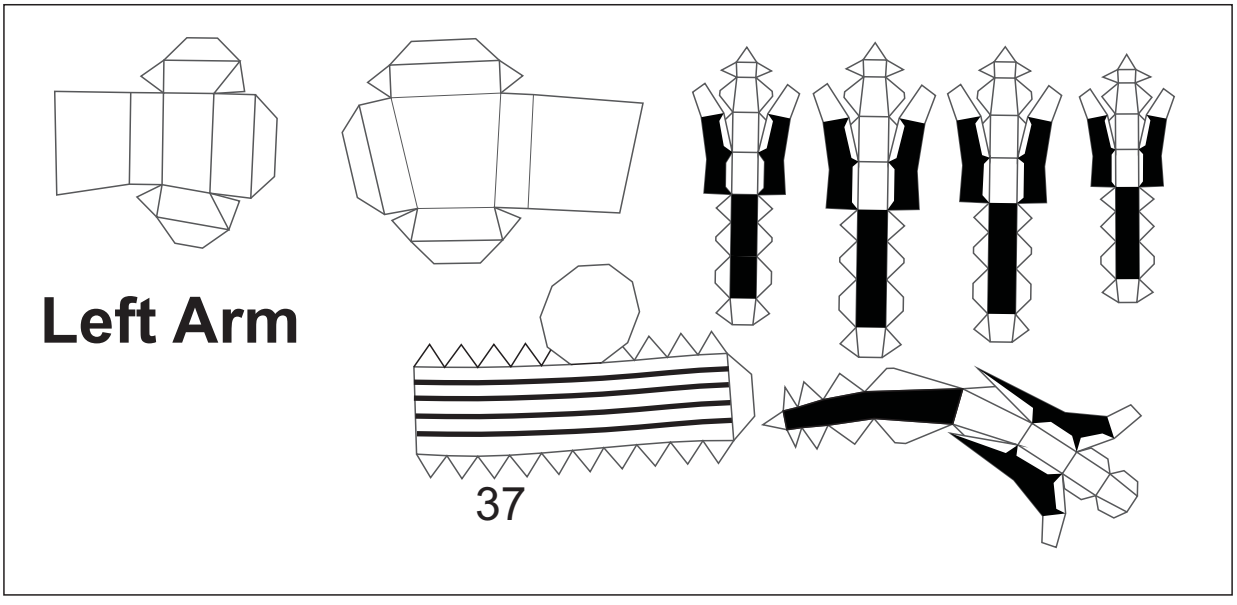

# SILVER

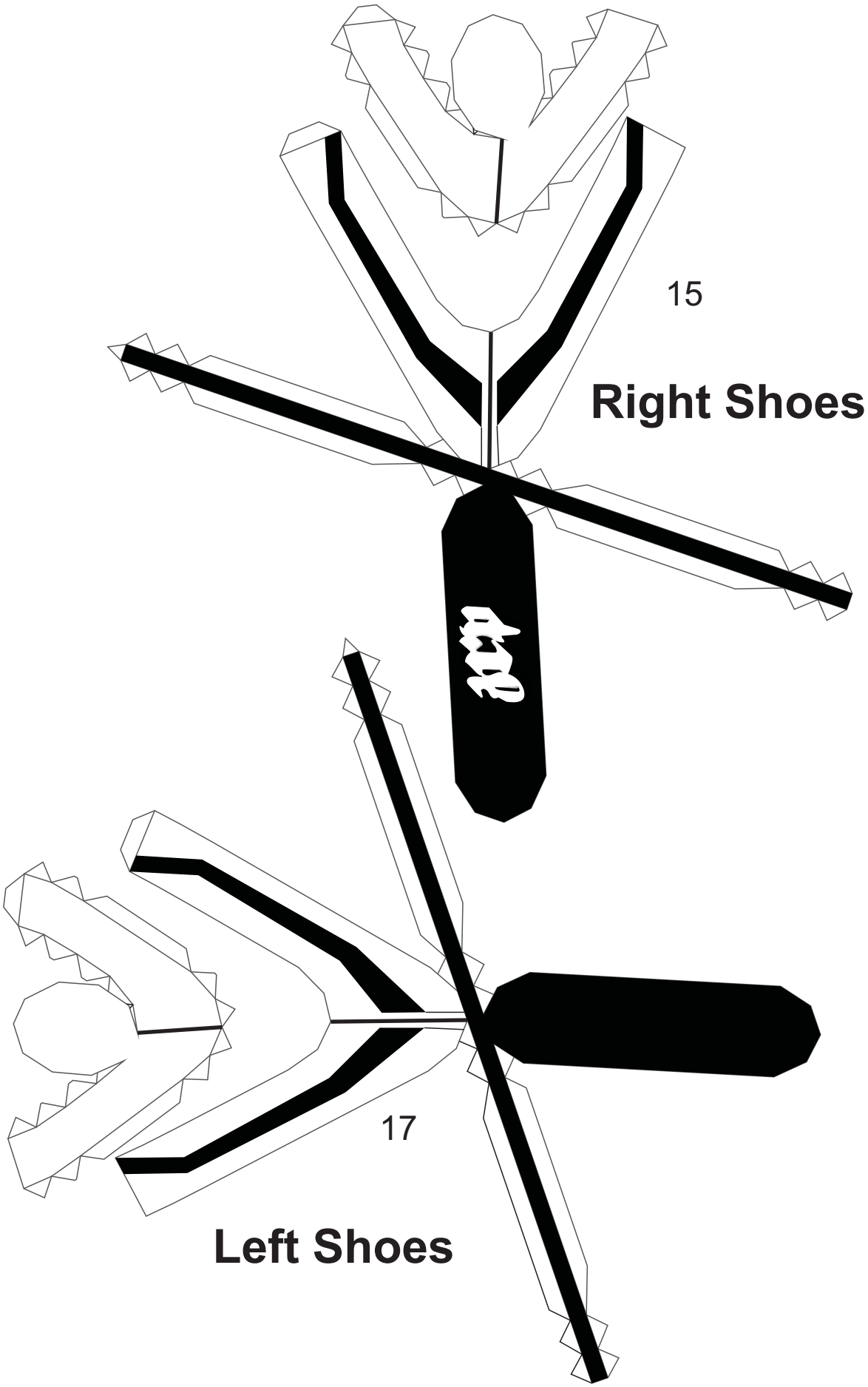

# BLACK

## Right Leg And Right Hand

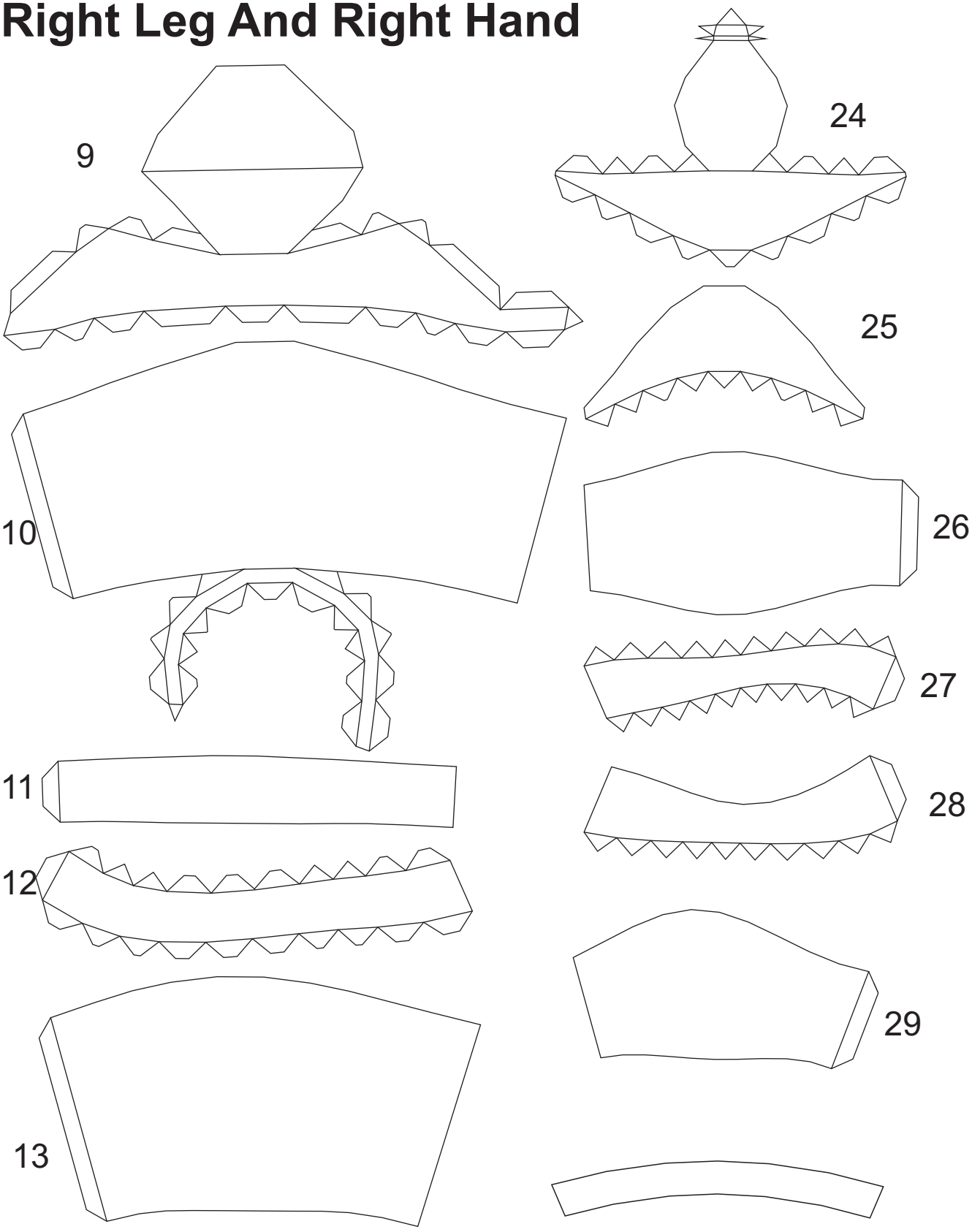

# BLACK

## Left Leg And Left Hand

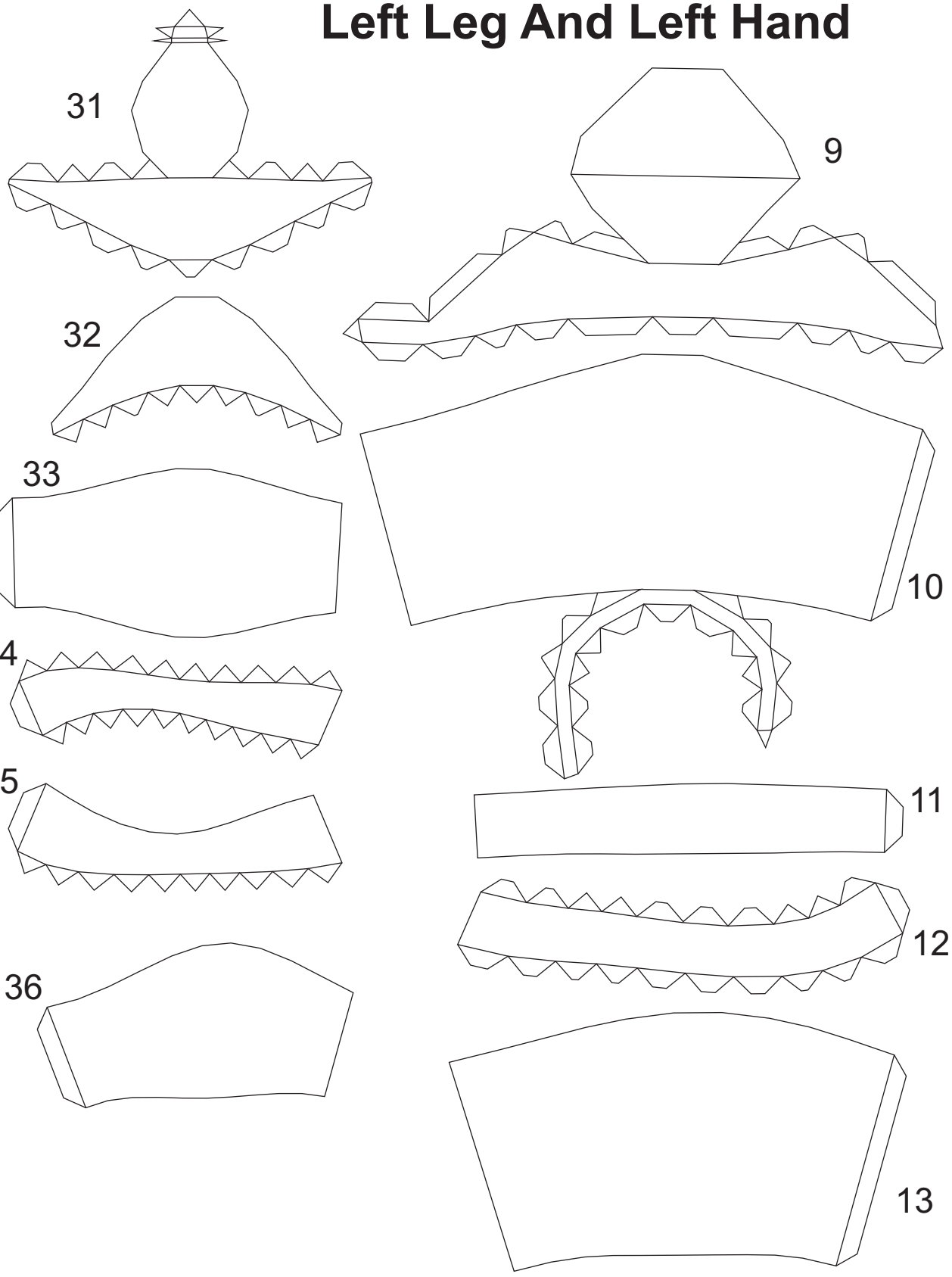

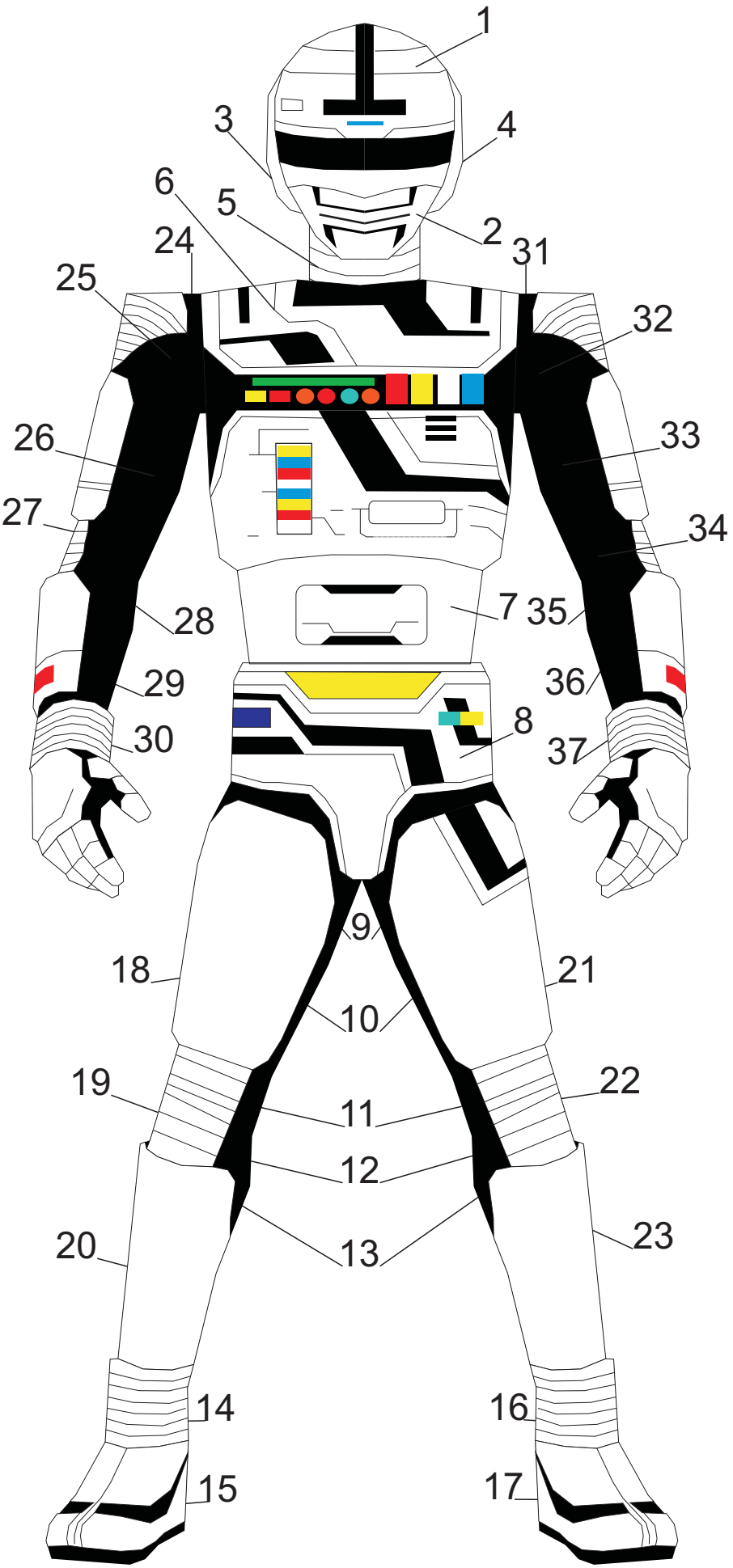
1
3
4
6
5
2
24
31
25
32
26
33
27
34
28
7
35
29
36
8
30
37
9
18
21
10
19
22
11
12
20
13
23
14
16
15
17