H

Parts 4,6,7,8: score tabs before cutting.

1

2

3

4

5

6

7

7a

9

6a

8

8a

n1_part1.pdf v1.1 2000-Nov-09 © 2000 by Ralph Currell

H

1

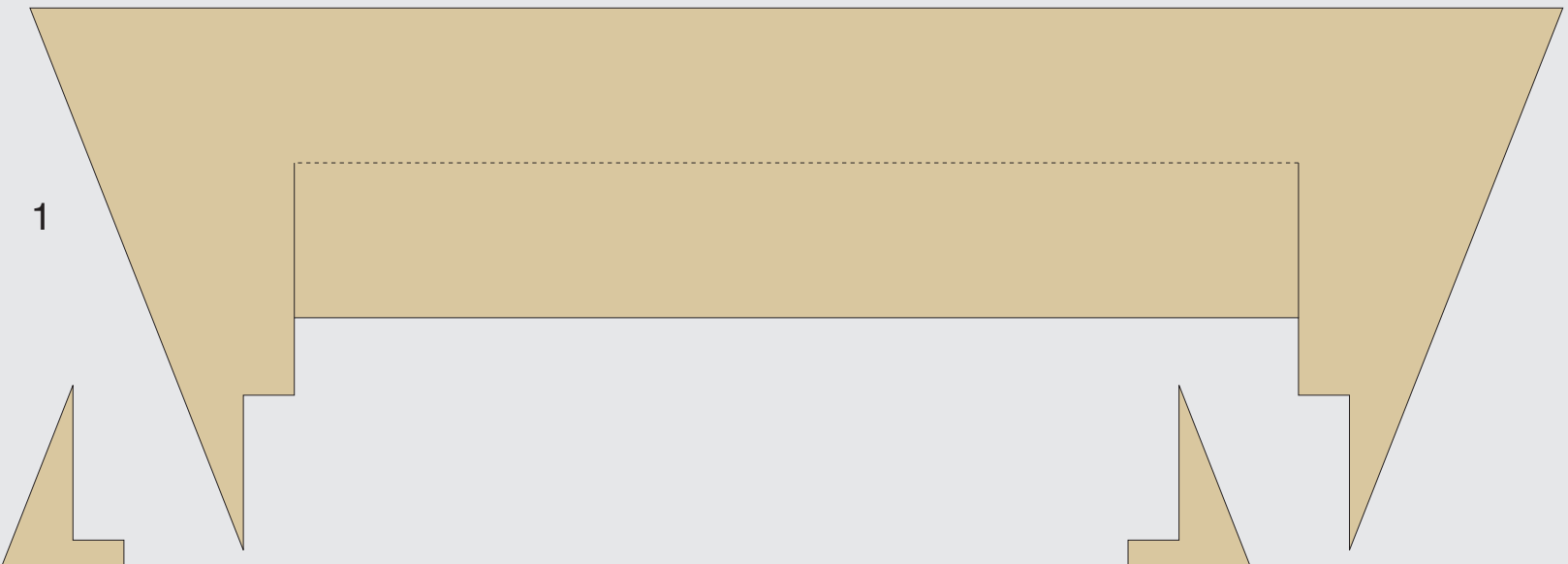

2



1

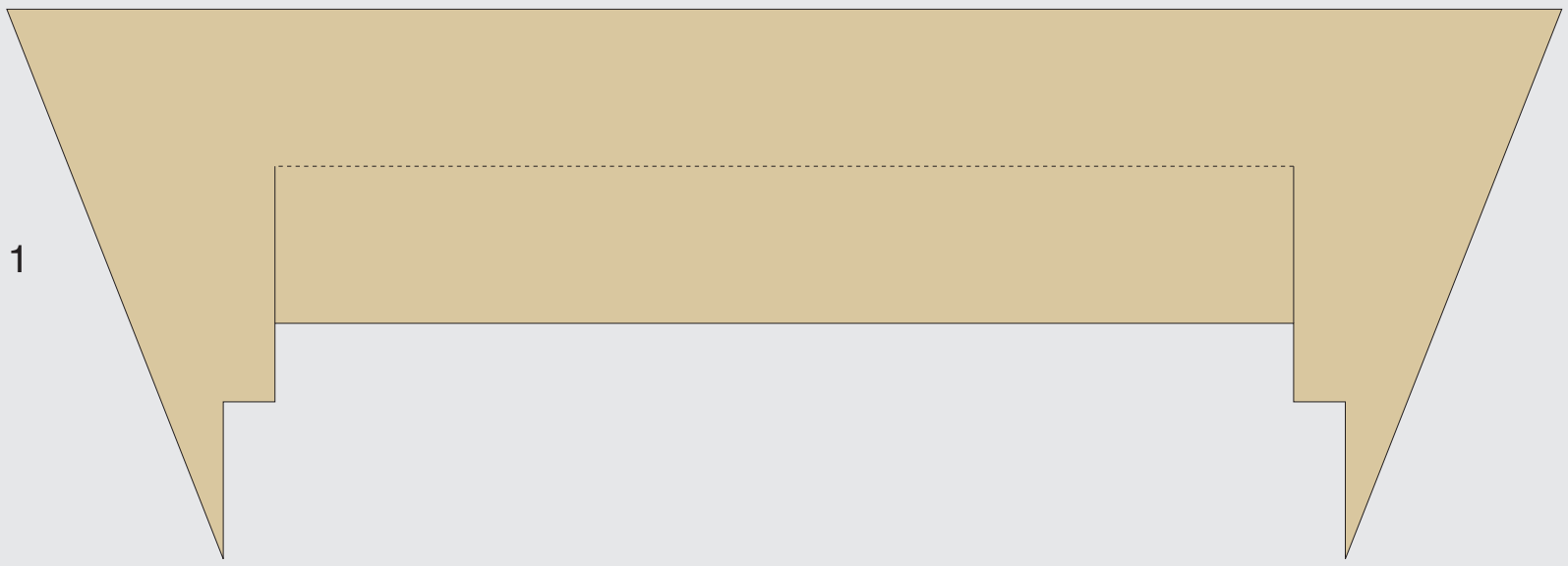

Ракета-носитель Н-1
Rocket Booster N-1

4

3

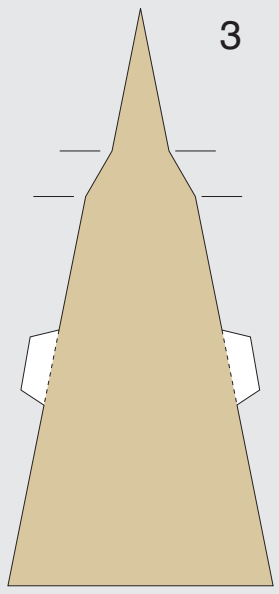

3

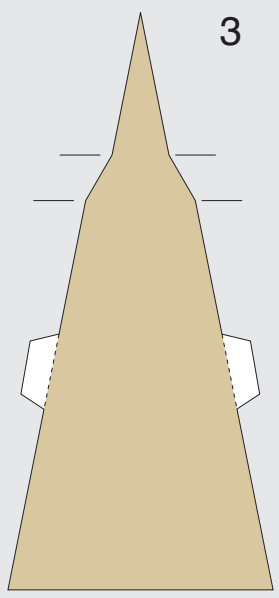

3

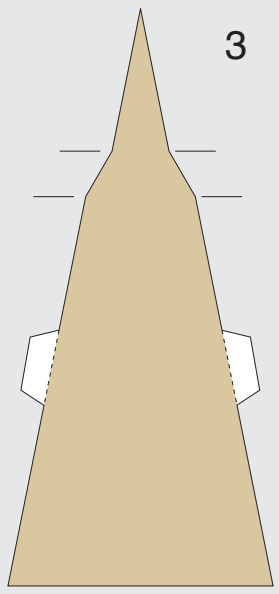

Part 4:
score along light
coloured lines.

n1_part1.pdf v1.1 2000-Nov-09 © 2000 by Ralph Currell

A

1

2

Parts 1&2:
score along light
coloured lines.

3

4

5

6

7

8

9

10

11

12

Parts 9-12:
score along light
coloured lines.

13

Open slots
(32 places)

14

15

16

17

18

19

20

21

22

23

24

25

Open slots (2 places)

Parts 16-24:
score along light
coloured lines.

n1_part2.pdf v1.0 2000-Nov-09
© 2000 by Ralph Currell

A

B

1

Open engine holes (8 places)

2

3

4

5

6

7

Part 11:
score along light coloured lines.

8

9

10

11

12

13

14

15

16

© 2000 by Ralph Currell

B

C

1

2

3

4

5

6

7

8

9 score along light coloured lines.

10

11

12

13 Open engine holes (4 places)

14

15

16

17

18

© 2000 by Ralph Currell

C

D

1

2

4

5

7

3

8

9

10

11

6

12

Open slots
(16 places)

13

14

15

Parts 16-24:
score along light
coloured lines.

16

17

18

19

20

21

22

24

23

25

26

29

31

27

33

35

34

36

28

30

32

Open slots
(4 places) *after*
gluing to part D31.

n1_part2.pdf v1.0 2000-Nov-09 © 2000 by Ralph Currell

D

E

1

2

3

4

5

6

7

8

9

10

11

12

13

(top)

TOP

14

15

Open slots (2 places) *after* doubling part.

16

17

18

19

Parts 18 & 19: score along light coloured lines.

20

21

22

23

24

25

26

27

28

29

30

31

32

33

n1_part2.pdf v1.0 2000-Nov-09 © 2000 by Ralph Currell

E

F

Score tabs
before cutting

1

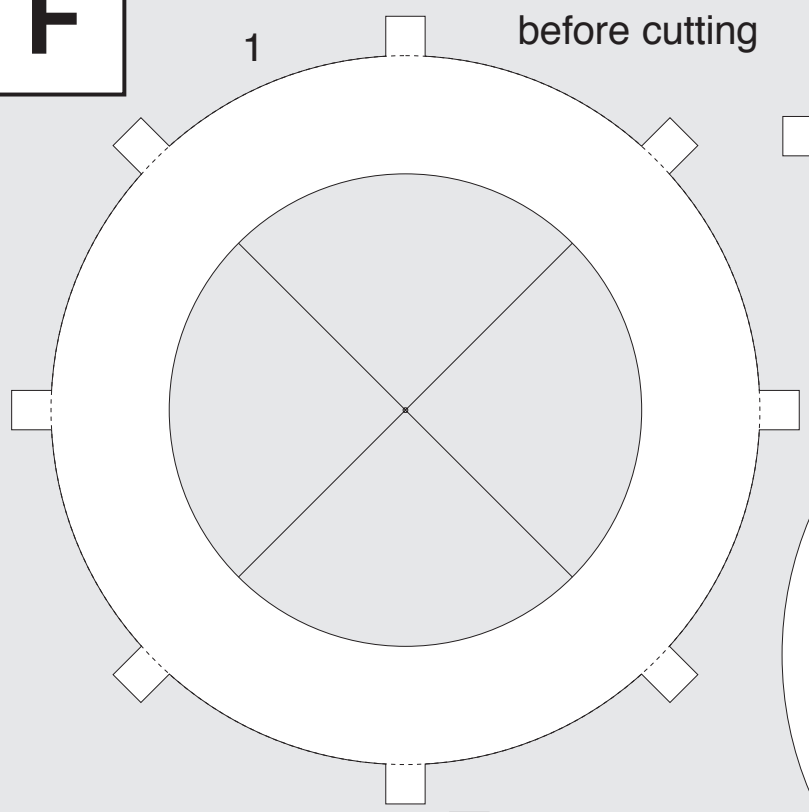

3

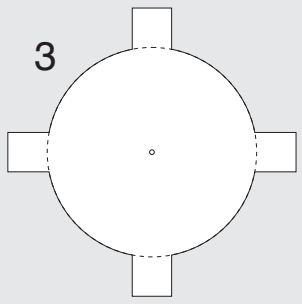

4

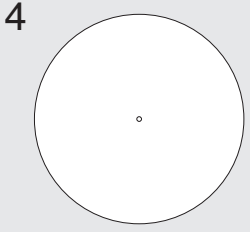

5

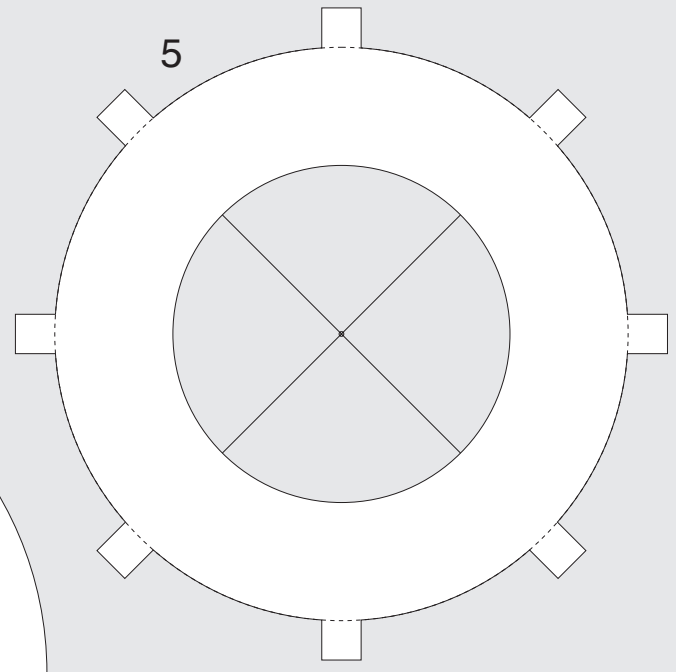

2

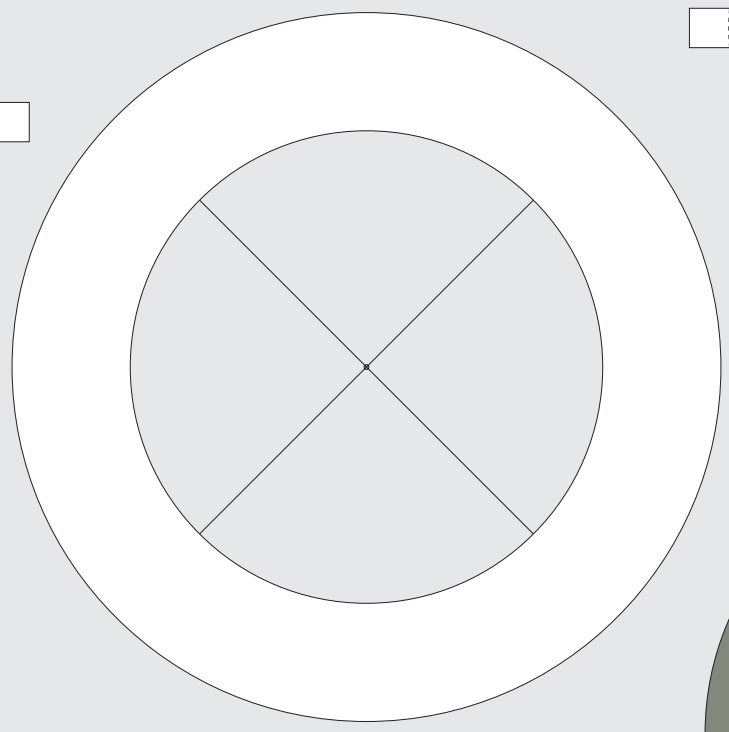

6

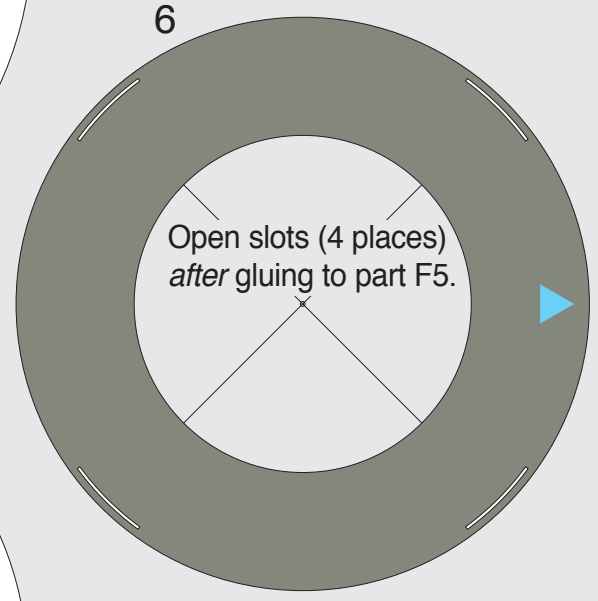

7

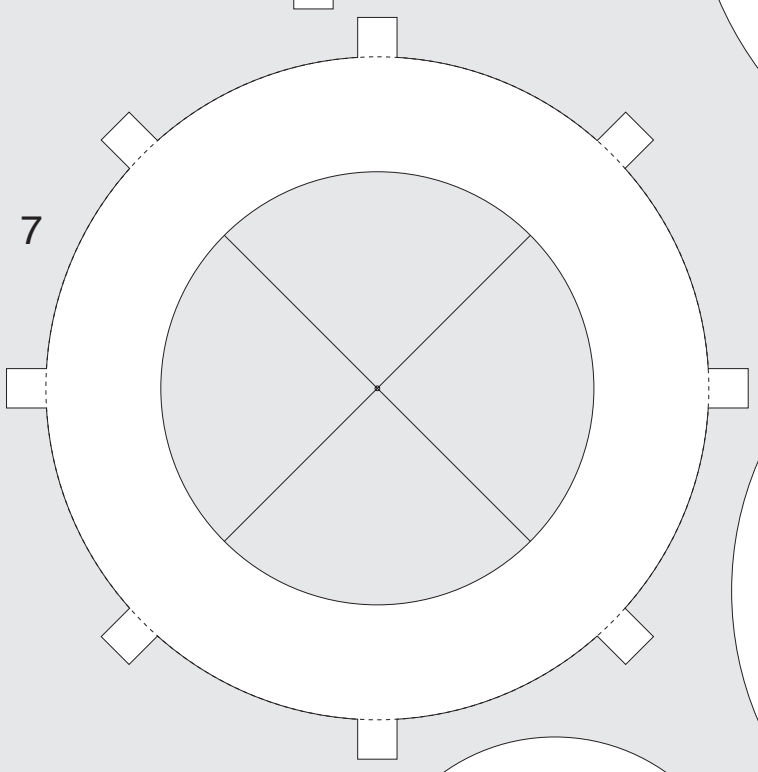

8

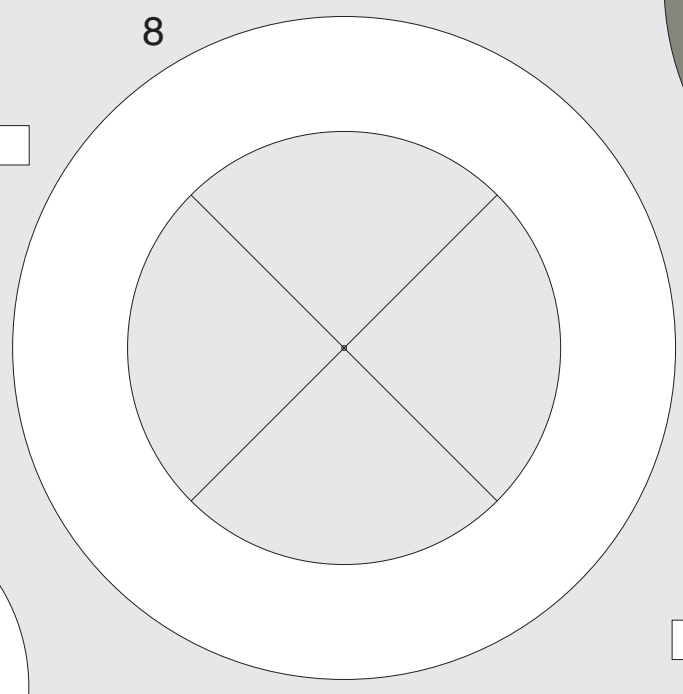

11

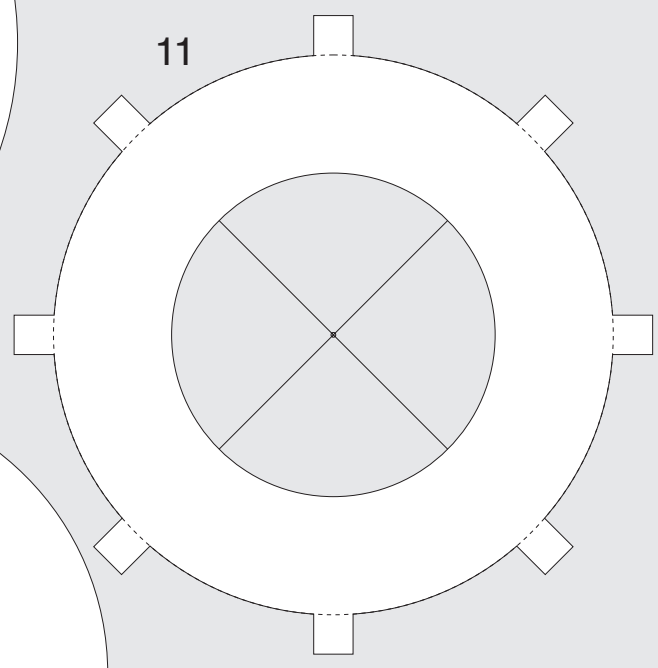

10

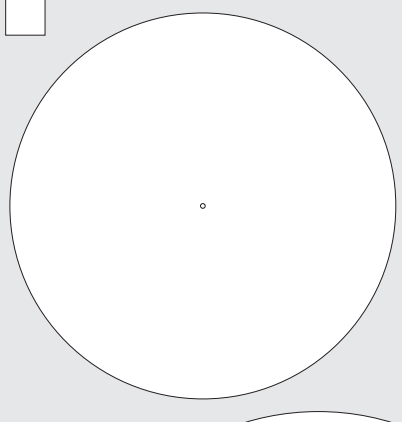

9

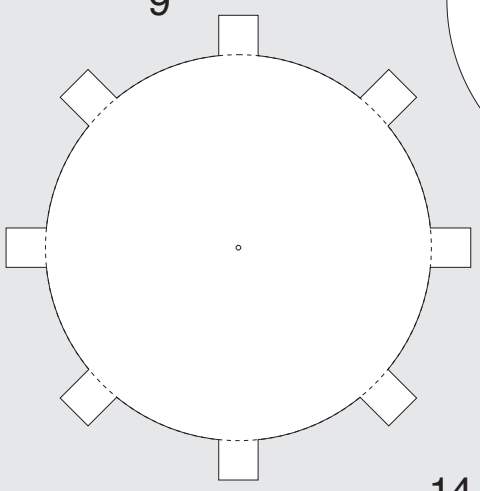

12

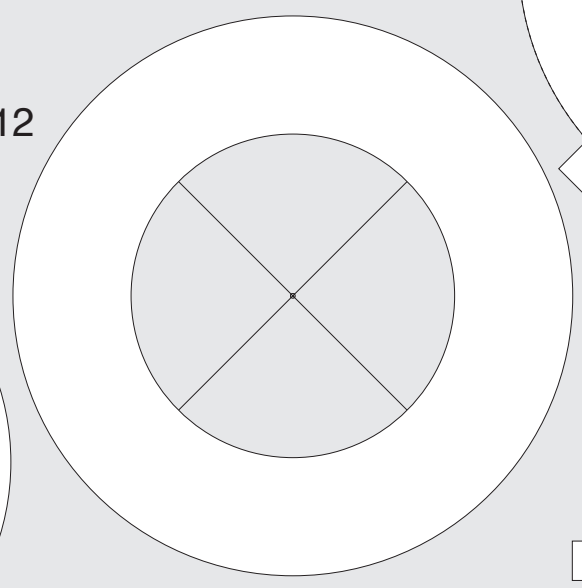

14

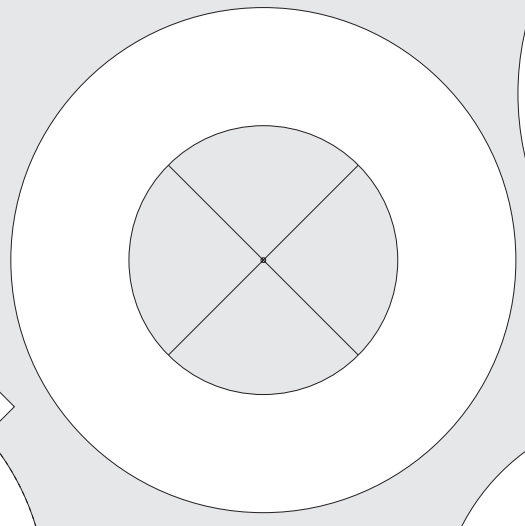

15

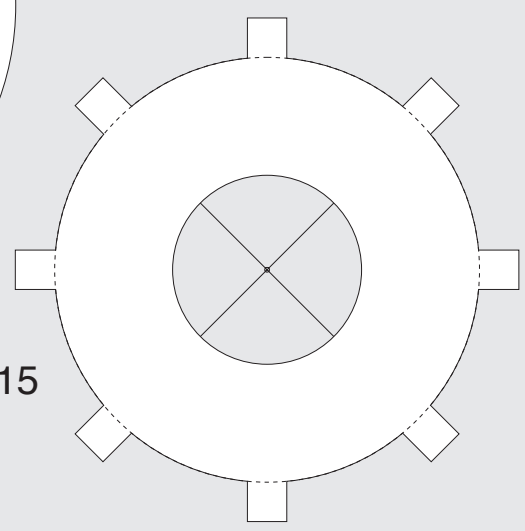

13

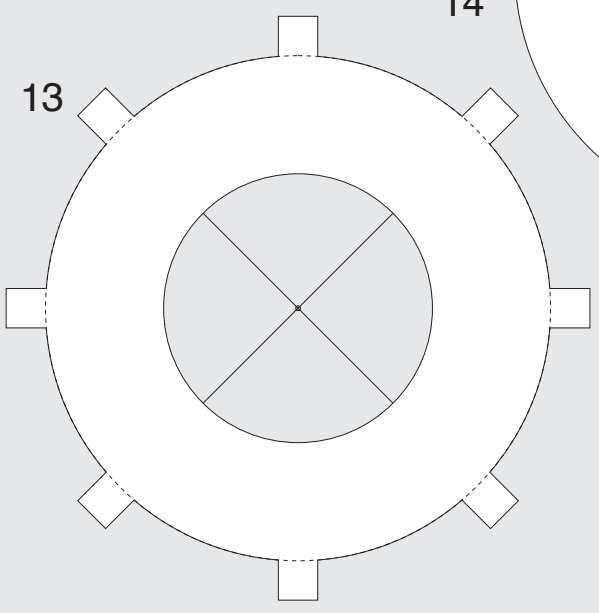

16

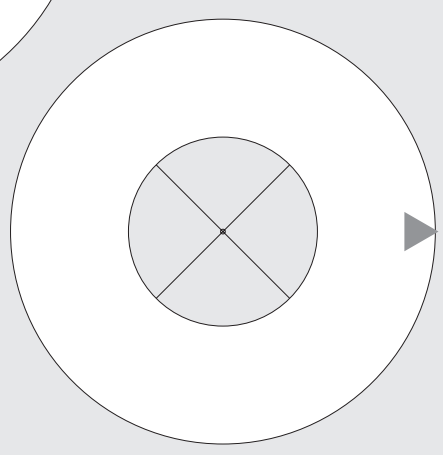

 © 2000 by Ralph Currell

F