CURRELL GRAPHICS

Assembly Instructions for N-1 rocket (first stage)

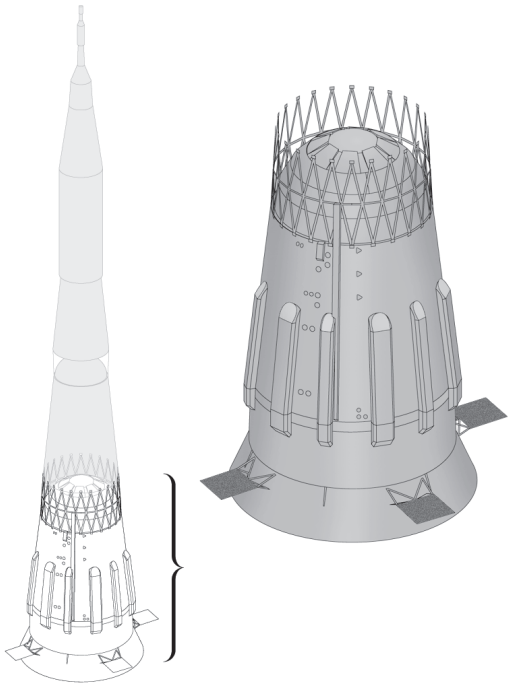

History of the N-1 heavy booster

In July 1969 the first human set foot on the lunar surface, and the United States had won the moon race. Few people at the time realized how narrow was the margin of victory. Despite tremendous difficulties, the Soviet Union came remarkably close to launching a cosmonaut to the moon using a heavy booster known as the N-1. For decades this rocket remained shrouded in such secrecy that many denied its existence. Only in recent years has information about this project been revealed to the rest of the world.

The N-1 was the creation of the great rocket designer and visionary, Sergei Korolev. In the early 1960s he proposed a series of heavy rocket boosters capable of launching large satellites and space stations, lunar missions, and even manned missions to Mars and Venus. The project suffered due to lack of funding and low priority, until in August 1964 the Communist Party Central Committee ordered that a manned lunar mission be launched ahead of the United States. This was a tall order, especially since the US lunar program had started three years earlier. The first N-1 flight was planned for 1966, with the first lunar landings in 1967 or 1968.

In addition to underfunding, the N-1 project (and the Soviet space program in general) was hampered by conflict among the chiefs of the various design bureaus. Nevertheless, Korolev's team made progress on the booster and the associated spacecraft and lunar lander. In 1966 Sergei Korolev died while undergoing surgery and the project fell behind schedule, resulting in the first N-1 test flight being delayed until February 21, 1969. This flight at the Baikonur launch complex began well, but an engine fire broke out after launch and the engine control computer mistakenly shut down all the engines, causing the unmanned rocket to crash downrange. With this failure, it was apparent that the Soviets could not beat the USA to the moon. A second launch in July 1969 was an even worse disaster; the engines were shut down just after liftoff, and the resulting explosion as it fell back to earth destroyed the launch pad.

Having lost the race to put the first man on the moon, the Soviets planned to use the N-1 to establish a permanent moon base, and work continued on eliminating problems in the design. Two more launches were attempted in 1971 and 1972, and while both failed, data from the launches indicated that the problems were being overcome, and more reliable engines were now available. Confidence was high that the next flight would be successful, but in May 1974 the Soviet space program was drastically reorganized. The N-1 project was cancelled and work began on the *Energia* booster and *Buran* space shuttle. The several completed and partially constructed N-1s were scrapped.

The N-1 story, though ultimately one of failure, provides a fascinating look at what might have been. In spite of a late start and underfunding, the Soviets came close to having a successful heavy-lift booster which might have led to the first moon landings, a permanent moon base and even manned interplanetary missions. With end of the US–Soviet space race, and the low priority currently given to manned space exploration, these dreams have been left for future generations to realize.

The Model

This model builds into a 1/144 scale replica of the N-1 3L in the markings of its first test flight of February 1969. The first stage and display base stand approximately 9 inches high. When all stages are added the total height will be almost 30 inches. A word of caution: this is not suitable for assembly by young children, due to the use of sharp tools and the complexity of some assembly steps. It is recommended for those with some previous experience in card modeling. If you have any comments or suggestions regarding this kit, I can be reached by e-mail at models@currell.net.

My thanks to Alex Shliadinsky for his excellent drawings which greatly assisted me in the design of this model.

This document contains the instructions for the **first stage** only. Model parts are contained in the document n1_part1.pdf. Parts and instructions for the second and third stages and the payload shroud will be released in separate documents.

Print out the parts document on 8.5"x11" or A4 size white card stock suitable to your printer. **Note:** two copies of parts sheet **A** are required.

Tools

Before beginning, you will need the following tools and materials:

a) white glue
b) a glue applicator such as wooden toothpicks or a small paintbrush
c) scissors (optional)
d) a sharp knife for cutting
e) a flat cutting surface
f) a ruler or straight edge
g) a scoring tool or blunt knife for creasing the fold lines
h) a long, slender tool such as a letter opener, for applying pressure to hard-to-reach places

Hints

a) Select a well-lit, comfortable work area that will remain undisturbed when you are not there.
b) Keep your hands and tools clean when working, to avoid getting glue on visible parts of the model.
c) It's easier to stay organized if you only cut out those parts you need for each step.
d) Make sure your knife is sharp. When cutting straight lines, use a straight-edge. Scissors, if used carefully, can be used for large curved parts.
e) Study the diagrams carefully, and always test-fit the parts before applying glue.
f) You may wish to colour the edges of the parts to make seams less visible. Pencil crayon or paint applied with a fine brush can be used (experiment on scrap pieces to see what works best).

Assembly

In these instructions, the directional terms "top" and "bottom" assume the rocket is vertical (engines at bottom). Scoring of parts is indicated by thin black lines outside the part's outline or by dashed lines on the part's surface. Score parts *before* cutting them out. In the diagrams, subassemblies are identified by a number within a circle (e.g. ②), corresponding to the step in which it was assembled.

Assemble the fuel tank (steps **1–3**). The tank is made up of five assemblies, which comprise an outer surface segment (the "skin" of the rocket), a connecting strip and (except for the tip segment) a circular former to provide strength and maintain the segment's shape. To construct a typical assembly, carefully cut out the parts and glue the connecting strip to the inside of the surface segment. These strips have a thin line along the centre, which must be lined up with the respective edges of the surface segment (see the diagrams). The segment is then rolled so the edges butt together and are held by the connecting strip. Once dry, the former ring is glued inside the assembly, as close to the narrow end as necessary to obtain a snug fit. Join all the segments, ensuring that the seams line up.

(**Step 4**) glue small parts B7, 8, 9 & 11 to surface sections B1 and B2 (use printed shapes on surfaces for locating parts). B1 and B2 combine, with connecting strips B3, to form a single body segment. Attach former ring G3/G3a, ensuring the top of the ring is flush with the edge of the body, and that the printed triangle lines up with one of the body seams. In a similar way, assemble the middle body segment (**step 5**). Attach parts B10 to A11, and wrap A11 around the top of the segment as shown in diagram, lining up the printed markings with those on the body. A slight gap between the ends of A11 is acceptable, since this area will be covered later. Attach the two body assemblies (**step 6**) ensuring the seams line up.

Fold and glue the fuel line fairings A6 and A7 (**step 7**), and attach to the body using the tabs & slots for alignment (**step 8**).

Fold plates D2 and attach to the fuel tank as indicated by printed lines on the second segment from the top (**step 9**). Attach the fuel tank to the body using the slots in the body's top plate, and ensuring the fuel tank seam lines up with the printed arrow (**step 10**). Assemble the inner engine base (**step 11**).

Form and glue the engine mountings A4 and E4 (**step 12**). The shape of the finished parts should resemble a circle with a bulge at one end (see diagram). Assemble the inner and outer exhaust cones (**steps 13, 14**). The inner and outer surfaces are attached such that they will overlap when the rolled into a cone shape. Ensure that the inked surface of part A5 faces the inside of the cone. Glue vent tube E5 as shown in diagram.

Attach engine mountings A4 (from step 12) to the inner engine base (**step 15**). Ensure that they are oriented to match the printed shapes around the holes. Attach the exhaust cones from step 13, lining up the vent tube with the bulge on the engine mounting. The wide ends of the cones should all be in the same horizontal plane when correctly attached.

Attach the stiffeners H4 and H5 to the non-inked side of base plate B1 (**step 16**), ensuring H5 does not block any of the slots. Attach engine mountings E4 (from step 12) to the inked side of the base plate (**step 17**), aligning with the printed shapes around the holes. Attach exhaust cones from step 14, lining up the vent tube with the bulge on the engine mounting. Join the inner base with the base plates (**step 18**) using the tabs & slots, and lining up the inner base seam with the light blue triangle on the base plate.

Assemble locking ring assembly (**step 19**) and add brackets (**step 20**) using printed shapes on outer surface of ring for location. Join locking ring to base assembly (**step 21**) using tabs & slots, so that one of the seams on the ring's outer surface lines up with the yellow triangle on the base plate.

Add cross braces F3 & F4 to base assembly (**step 22**), using markings on base plate stiffener for alignment, and ensuring printed black bars face down. Assemble lower body segment (**step 23**), and add strips B6 using printed shapes on outer surface for location. Glue base assembly to lower body segment (**step 24**). The base plate should be flush with the bottom of the body, and small black triangles on base plate aligned with body seams. Attach lower and upper body sections (**step 25**).

Glue truss parts F1 & F2 together, ensuring the glue is applied in a thin layer over the entire surface (**step 26**). When dry, carefully cut out the truss shape. This is somewhat challenging, so take your time and ensure your blade is sharp. It will be easier if the inner triangles are cut first, but do not remove the cut-out parts until the outer edges are cut. Wrap the truss around the upper part of the body (**step 27**), using the printed squares on the body surface as gluing points for the small pads at the bottom of the truss. Glue the ends of the truss together where they meet.

Fold the conduits B4 & B5 and attach as indicated by the printed shapes on the body (**step 28**). Part B5 will extend about half-way up the outside of the truss. Fold the stabilizers (E2, E3) in half and cut out the printed shape. Take care when cutting the narrow mounting struts. Glue the stabilizer halves E2 and E3 together, and attach to the mounting points printed on the lower body. The stabilizers should stick out horizontally from the body.

If desired, assemble the display stand (**step 29**). The rocket can be placed vertically on the "shoulders" at the stand's three corners.

1 Typical fuel tank segment

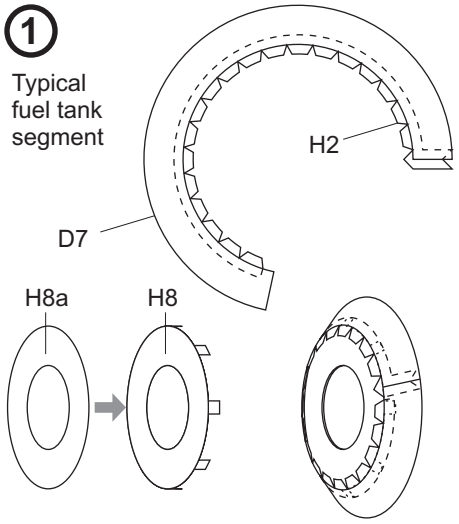

2 Fuel tank top

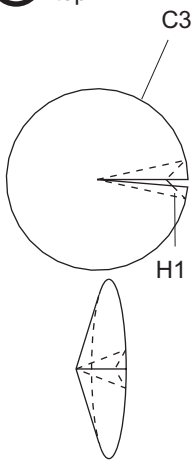

3 Fuel tank assembly

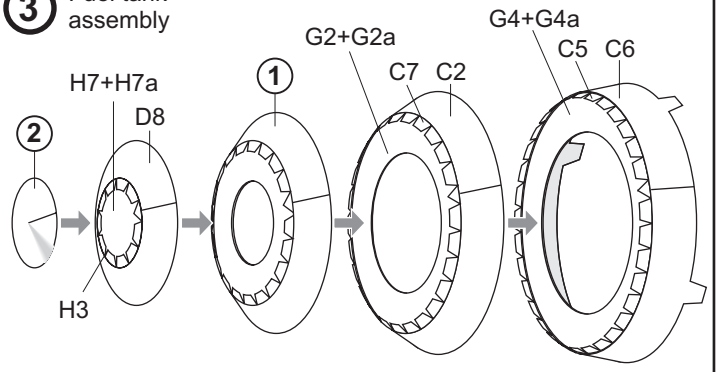

4 Upper body segment

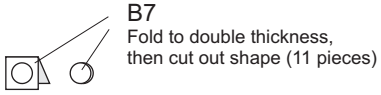

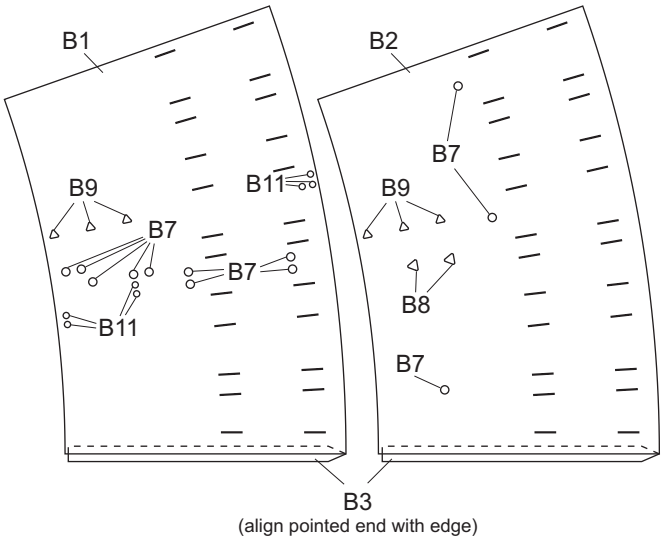

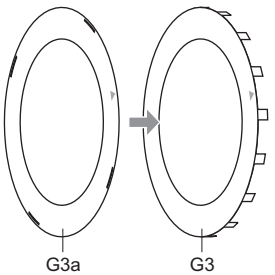

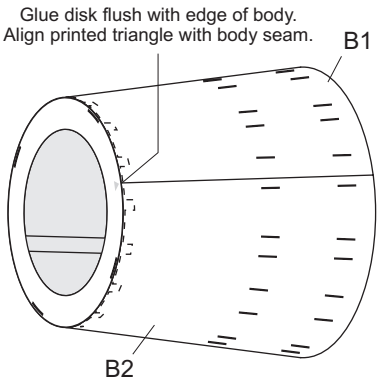

5 Middle body segment

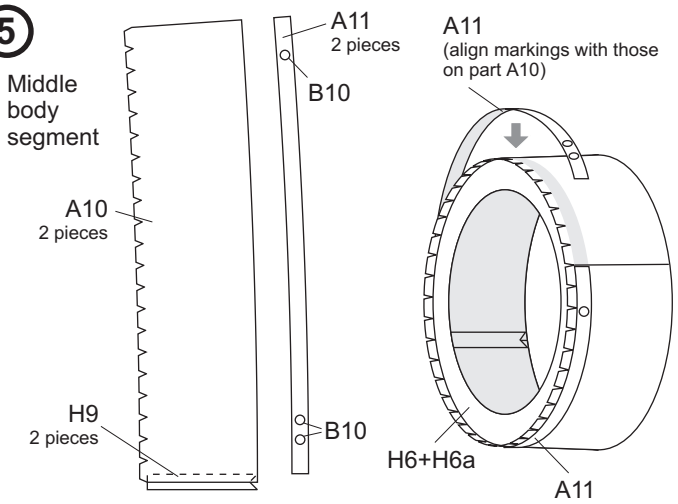

6 Body assembly

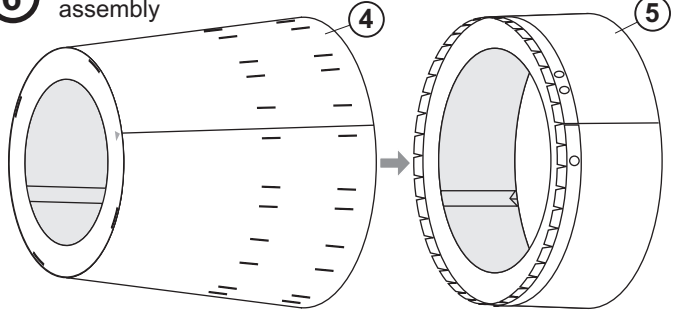

7 Fuel line fairings

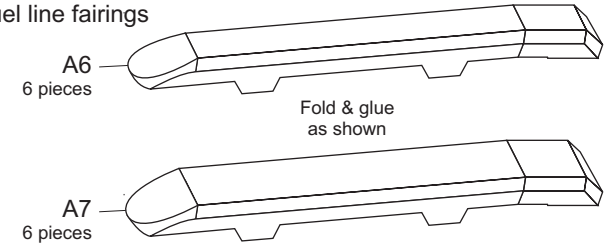

8 Fairing attachment

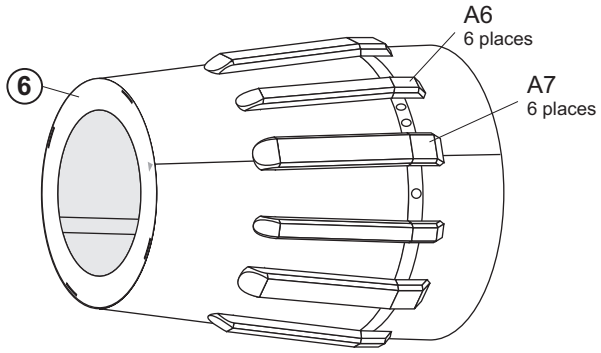

9 Fuel tank top plates

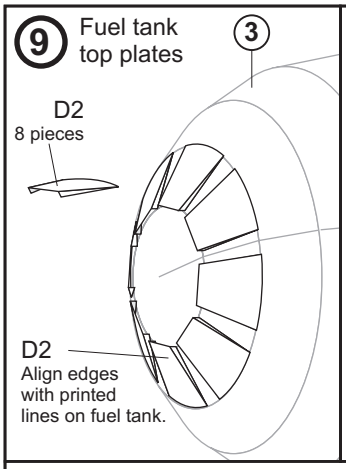

10 Fuel tank attachment

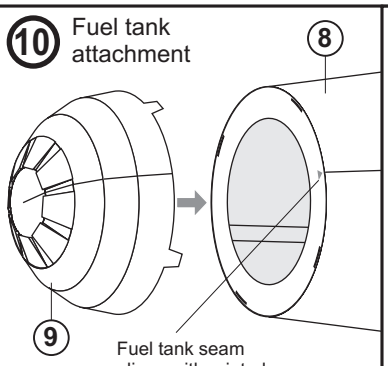

11 Inner engine base assembly

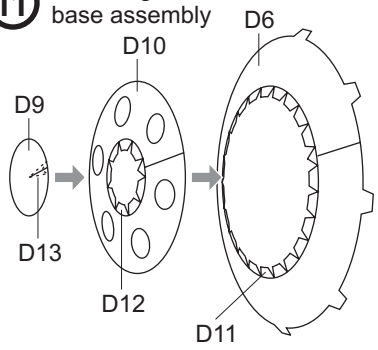

12 Engine mountings

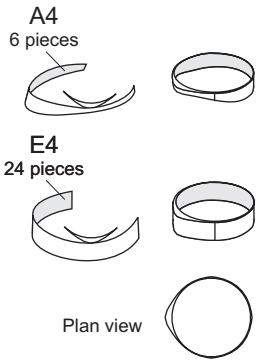

13 Inner exhaust cones (6 pieces)

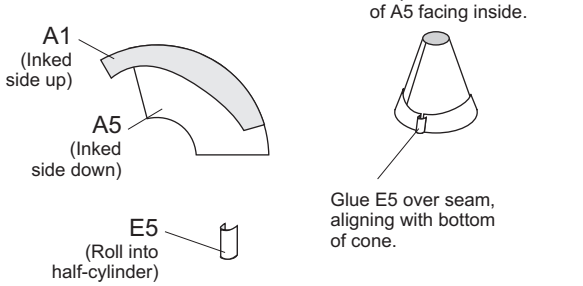

14 Outer exhaust cones (24 pieces)

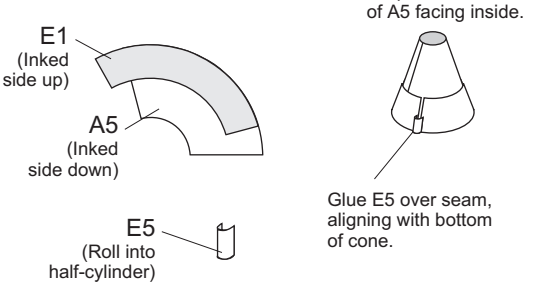

15 Inner engine assembly

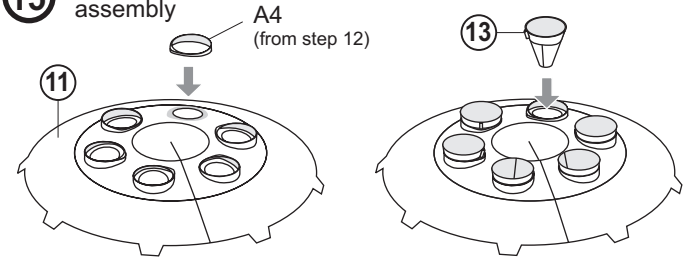

16 Base plate stiffeners

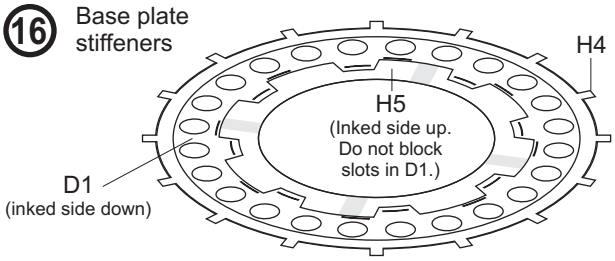

17 Outer engine assembly

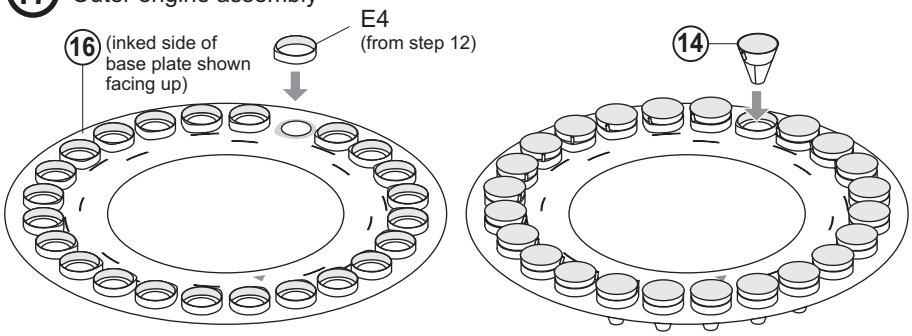

18 Join inner/outer engine assemblies

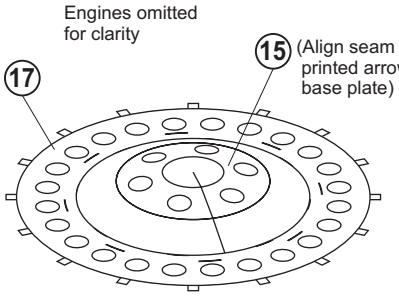

19 Locking ring assembly

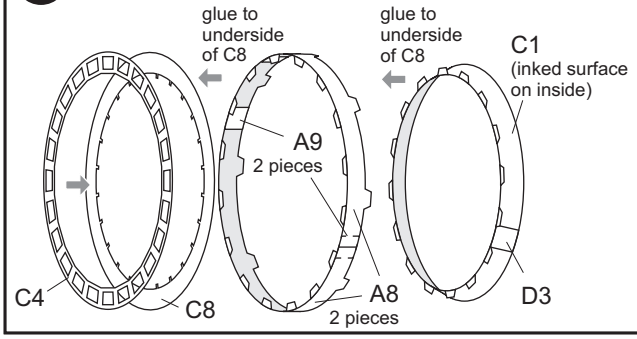

20 Locking ring brackets

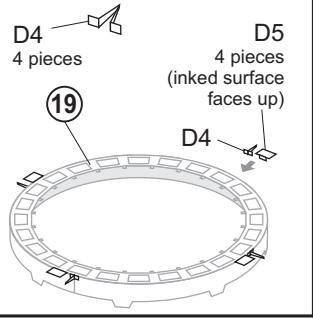

21 Join locking ring to base plate

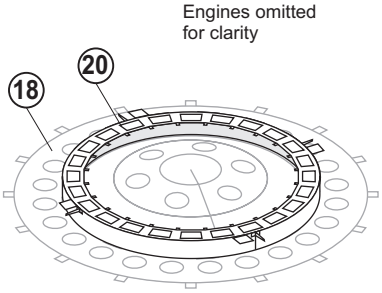

22 Base plate cross braces

Fold parts F3 & F4 so black bars face down. Align using shaded areas on base plate.

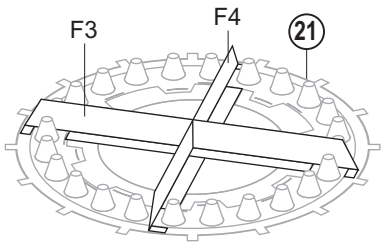

23 Lower body segment

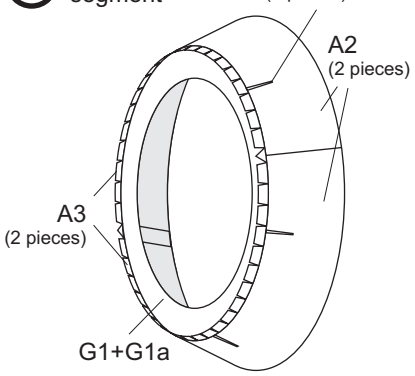

24 Join base & lower body

Note: align small black triangles on edge of base plate with body seams.

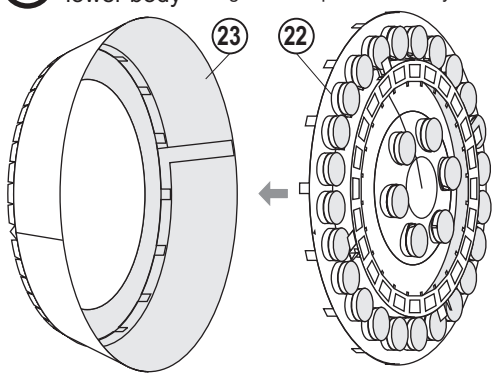

25 Body final assembly

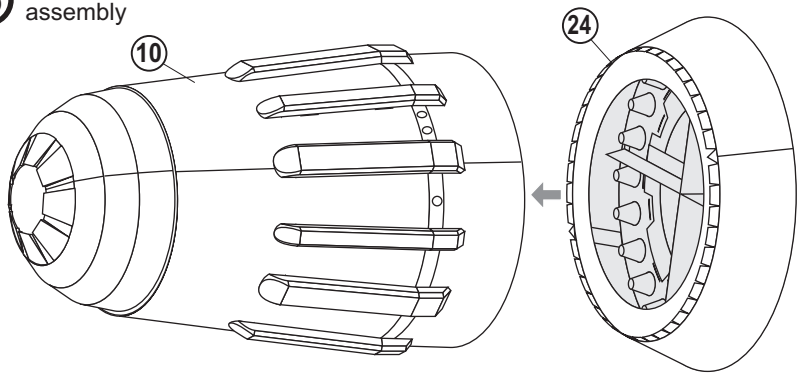

26 Interstage truss

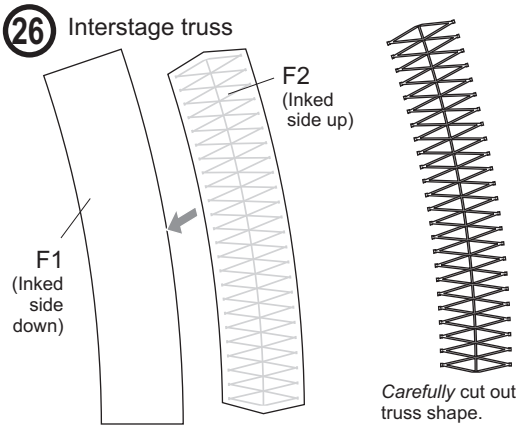

27 Truss attachment

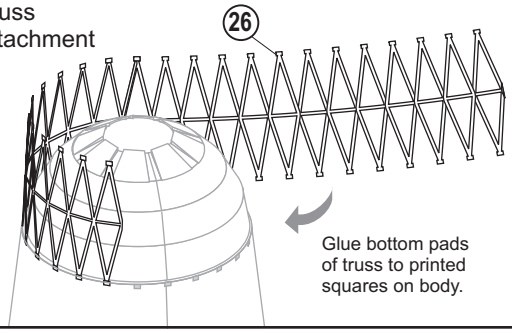

28 Conduits and stabilizers

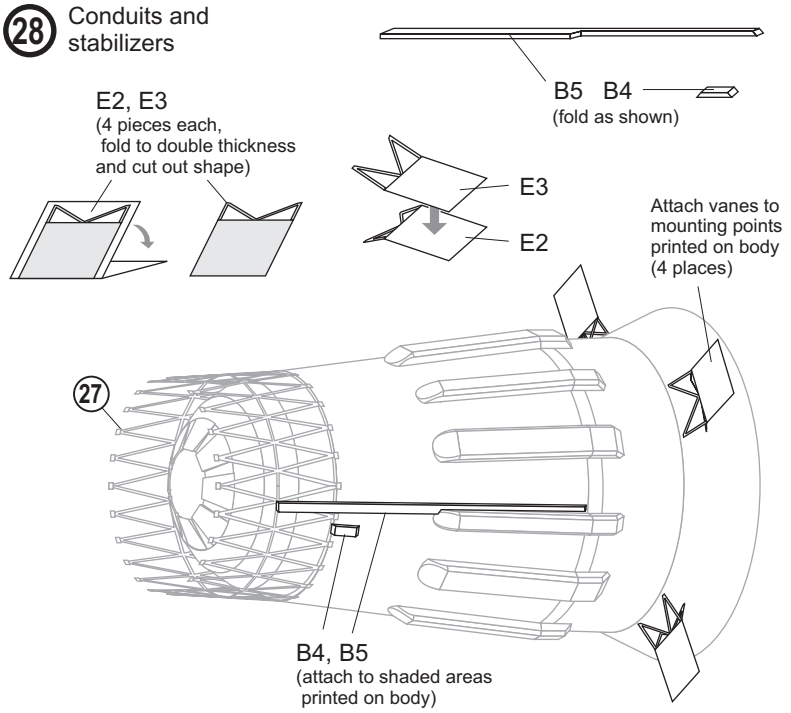

29 Display Stand

