Wicked Queen's Heart Box Paper Model—License Agreement

By downloading this file and the accompanying Licensed Materials, the end user ("Licensee") agrees to conform to this License Agreement (this "Agreement") with Robert Nava, the Disney Experience website [www.disneyexperience.com] ("Licensor").

I. Content of Licensed Materials; Grant of License

The materials that are the subject of this Agreement shall consist of the Wicked Queen's Heart Box Paper Model in electronic and physical form (hereinafter referred to as the "Licensed Materials").

Licensee acknowledges that the copyright and title to the Licensed Materials and any trademarks or service marks relating thereto remain with Licensor and/or its suppliers. Licensee shall not have right, title or interest in the Licensed Materials except as expressly set forth in this Agreement.

Licensor hereby grants to Licensee non-exclusive use of the Licensed Materials in accordance with this Agreement.

II. Access of Licensed Materials to Licensee

Licensor will provide the Licensed Materials to the Licensee in the following manner:

File Transfer. Copies of the Licensed Materials will be provided to the Licensee through the Disney Experience website at the sole discretion of the Licensor.

III. Fees

Licensee is required to make no payment to Licensor for use of the Licensed Materials.

IV. Authorized Use of Licensed Materials

Authorized Uses. Licensee may make all use of the Licensed Materials as is consistent with the Fair Use Provisions of United States and international law. Nothing in this Agreement is intended to limit in any way whatsoever Licensee's rights under the Fair Use provisions of United States or international law to use the Licensed Materials.

The Licensed Materials may be used for purposes of research, education or other non-commercial use as follows:

Archival/Backup Copy. Upon request of Licensee, Licensee may create one (1) copy of the entire set of Licensed Materials to be maintained as a backup or archival copy during the term of this Agreement.

V. Specific Restrictions on Use of Licensed Materials

Unauthorized Use. Licensee shall not knowingly permit anyone other to use the Licensed Materials.

Modification of Licensed Materials. Licensee shall not modify or create a derivative work of the Licensed Materials without the prior written permission of Licensor.

Removal of Copyright Notice. Licensee may not remove, obscure or modify any copyright or other notices included in the Licensed Materials.

Distribution Rights. Licensee has no rights to transfer, host, or re-distribute the Licensed Materials or its derivatives under any circumstances or by any means available now or in the future.

Commercial Purposes. Other than as specifically permitted in this Agreement, Licensee may not use the Licensed Materials for commercial purposes, including but not limited to the sale of the Licensed Materials or bulk reproduction or distribution of the Licensed Materials in any form.

VI. Licensor Performance Obligations

Availability of Licensed Materials. Licensor shall make the Licensed Materials available to Licensee at his/her discretion.

Notification of Modifications of Licensed Materials. Licensee understands that from time to time the Licensed Materials may be added to, modified, or deleted from by Licensor and/or that portions of the Licensed Materials may migrate to other formats.

Completeness of Content. Where applicable, Licensor will inform Licensee of instances where online content differs from the print versions of the Licensed Materials.

Where applicable, Licensor shall use reasonable efforts to ensure that the online content is at least as complete as print versions of the Licensed Materials, represents complete, accurate and timely replications of the corresponding content contained within the print versions of such Materials, and will cooperate with Licensee to identify and correct errors or omissions.

Withdrawal of Licensed Materials. Licensor reserves the right to withdraw from the Licensed Materials any item or part of an item for which it no longer retains the right to publish, or which it has reasonable grounds to believe infringes copyright or is defamatory, obscene, unlawful or otherwise objectionable.

VII. Licensee Performance Obligations

Protection from Unauthorized Use. Licensee shall use reasonable efforts to protect the Licensed Materials from any use that is not permitted under this Agreement. In the event of any unauthorized use of the Licensed Materials by an Authorized User, (a) Licensor may terminate such Authorized User's access to the Licensed Materials, (b) Licensor may terminate the access of the Internet Protocol ("IP") address(es) from which such unauthorized use occurred, and/or (c) Licensee shall terminate such Authorized User's access to the Licensed Materials upon Licensor's request. Licensor shall take none of the steps described in this paragraph without first providing reasonable notice to Licensee and cooperating with the Licensee to avoid recurrence of any unauthorized use.

VIII. Early Termination

In the event that either party believes that the other materially has breached any obligations under this Agreement, or if Licensor believes that Licensee has exceeded the scope of the License, such party shall so notify the breaching party in writing. The breaching party shall have 1 week from the receipt of notice to cure the alleged breach and to notify the non-breaching party in writing that cure has been effected. If the breach is not cured within the 1 week, the non-breaching party shall have the right to terminate the Agreement without further notice.

Upon Termination of this Agreement for cause online access to the Licensed Materials by Licensee and shall be terminated. Authorized copies of digital Licensed Materials must be destroyed immediately.

IX. Perpetual License

Except for termination for cause, Licensor hereby grants to Licensee a nonexclusive, royalty-free, perpetual license to use any Licensed Materials that were accessible during the term of this Agreement. Such use shall be in accordance with the provisions of this Agreement. The means by which Licensee shall have access to such Licensed Materials shall be in a manner and form substantially equivalent to the means by which access is provided under this Agreement.

X. Warranties

Subject to the Limitations set forth elsewhere in this Agreement:

Licensor warrants that it has the right to license the rights granted under this Agreement to use Licensed Materials, that it has obtained any and all necessary permissions from third parties to license the Licensed Materials, and that use of the Licensed Materials by Authorized Users in accordance with the terms of this Agreement shall not infringe the copyright of any third party.

XI. Limitations on Warranties

Notwithstanding anything else in this Agreement:

Neither party shall be liable for any indirect, special, incidental, punitive or consequential damages, including but not limited to loss of data, business interruption, or loss of profits, arising out of the use of or the inability to use the Licensed Materials.

Licensor makes no representation or warranty, and expressly disclaims any liability with respect to the content of any Licensed Materials, including but not limited to errors or omissions contained therein, libel, infringement of rights of publicity, privacy, trademark rights, moral rights, or the disclosure of confidential information.

Except for the express warranties stated herein, the Licensed Materials are provided on an "as is" basis, and Licensor disclaims any and all other warranties, conditions, or representations (express, implied, oral or written), relating to the Licensed Materials or any part thereof, including, without limitation, any and all implied warranties of quality, performance, merchantability or fitness for a particular purpose. Licensor makes no warranties respecting any harm that may be caused by the transmission of a computer virus, worm, time bomb, logic bomb or other such computer program. Licensor further expressly disclaims any warranty or representation to Authorized Users, or to any third party.

XII. Assignment and Transfer

Neither party may assign, directly or indirectly, all or part of its rights or obligations under this Agreement without the prior written consent of the other party, which consent shall not be unreasonably withheld or delayed.

XIII. Governing Law

This Agreement shall be interpreted and construed according to, and governed by, the laws of California, excluding any such laws that might direct the application of the laws of another jurisdiction. The federal or state courts located in California shall have jurisdiction to hear any dispute under this Agreement.

XIV. Entire Agreement

This Agreement constitutes the entire agreement of the parties and supersedes all prior communications, understandings and agreements relating to the subject matter hereof, whether oral or written.

XV. Amendment

No modification or claimed waiver of any provision of this Agreement shall be valid except by written amendment signed by authorized representatives of Licensor and Licensee.

THE WICKED QUEEN'S HEART BOX

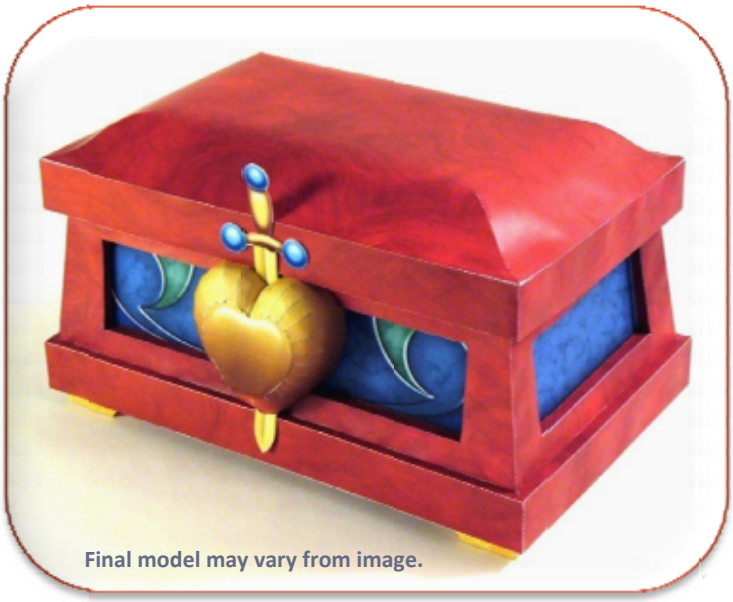

- Difficulty Level: 4 (of 10)
- Width: 8", Height: 5", Depth: 4.88 "
- 42 Full-color pieces.
- Hinged lid opens, and dagger slides through the heart.
- Approximately life-size.

Required Tools:

- Adobe® Reader®
- Color Printer
- Glue
- X-acto Knife (These are very sharp and can cause serious injury! Use with extreme caution, and keep out of reach of children.)
- Scissors

Optional Tools

- Thin cardstock (see Step 24)

Printing Guidelines:

When printing with Adobe® Reader®, it is important to use proper printing settings for correct alignment and scaling. Click the Print Tool button. In the Print settings dialog box, set **Page Scaling** to **None**, and enable the **Auto-Rotate and Center** option. Unless you are a professional modeler, you should print on 8 ½ by 11 (U.S. Letter) sheets, and should not change the recommended print settings.

Instructions:

When printing these instructions, you should print on both sides of the sheets to save paper. You can also print in black & white to save color ink/toner. Some people prefer not to print, referencing the instructions from their computer monitor.

Model Parts:

This model has been designed for printing on every-day printer paper, so you're ready print right away! However, some people prefer to print on cardstock of their choosing (each have their own preferences).

If you should need to re-print selective model parts, you can use the Snapshot Tool in Adobe® Reader®. Click the icon once, then click-drag a box around the area that you want to print. The selected area will flash once (a "snapshot"), and you're ready to print. In the Print settings dialog box, you will see a preview of the document. In the preview, only the snapshot appears and will be printed. This saves you from printing the whole page, thus saving ink/toner.

Troubleshooting Files:

If you feel that the model parts are not printing properly, you can use the alignment box in the lower-right corner of the model part sheets. Hold two or more sheets to a light source, and compare both the position and sizes of the alignment boxes.

Sometimes PDF files can become corrupted while downloading. This is not uncommon, and is no cause for alarm. Delete the bad files, and try re-downloading them. Another common error is that your version of Adobe® Reader® is out-of-date. Please visit the Adobe® Web site and download the latest version of the software. This typically solves 90% of users' file problems.

Construction Guidelines

Read these instructions and study the illustrations to know what/where to cut/fold. Before gluing, always dry-fit the pieces to ensure they fit properly. Be aware that paper will absorb moisture from watery glue, and it may expand.

When following these instructions, do not take the illustrations too literally. In many cases, pieces will be simplified (i.e. no tabs). Other times, pieces or entire sections may be missing that were previously displayed. This does not mean you should ever disassemble your model (unless instructed to do so).

Most model parts have numbered tabs. The numbers indicate which parts get glued to the tabs.

Model design ©2008 Robert Nava, The Disney Experience (www.disneyexperience.com). Any and all trademarks & copyrights are the properties of their respective owners. This fan-created model is not for sale or redistribution.

THE WICKED QUEEN'S HEART BOX

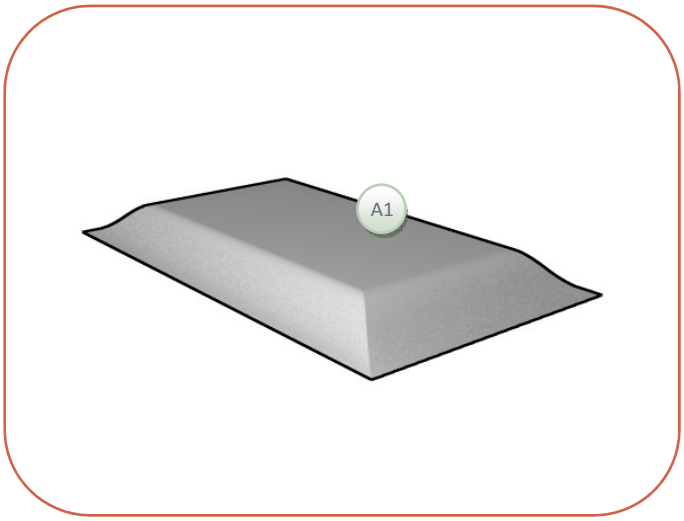

1. Assemble piece A1 as shown, printed side facing outward.

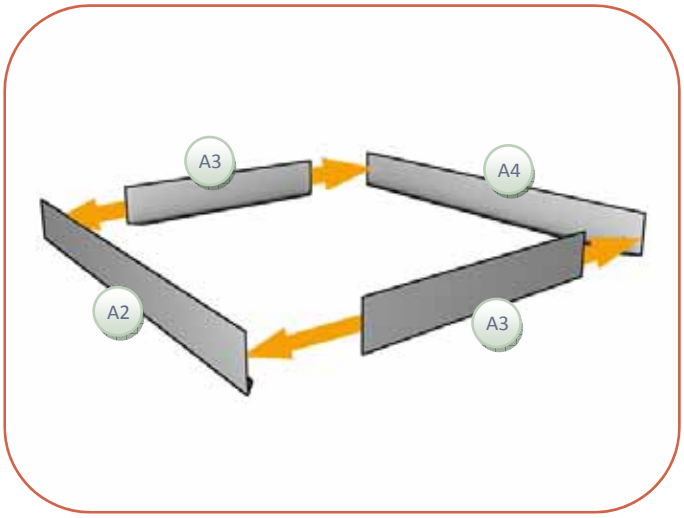

2. Glue pieces A2-A4 together as shown. Piece A2 will mark the front of the Heart Box.

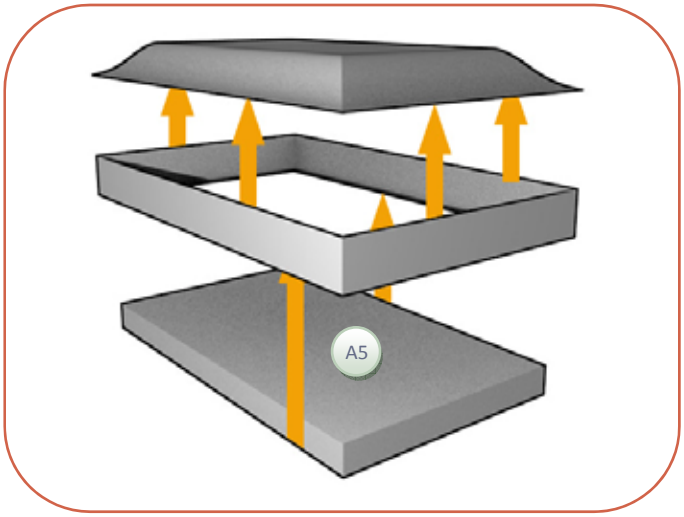

3. Glue pieces A2-A4 to the bottom rim of piece A1.

4. Assemble piece A4, printed side facing inward. Then, glue piece A4 into the lid assembly. Note that the piece has two blank areas; these should go to the back of the Heart Box.

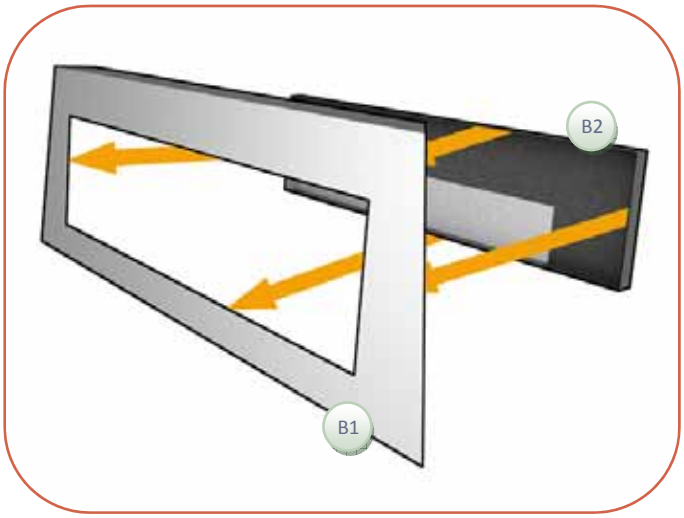

5. Assemble piece B2, printed side facing inward.
6. Glue piece B2 to piece B1 as shown. Note that piece B2 has a tab marked "TOP." Do not glue piece B2 upside down.
7. Repeat these steps for pieces B3-B6.

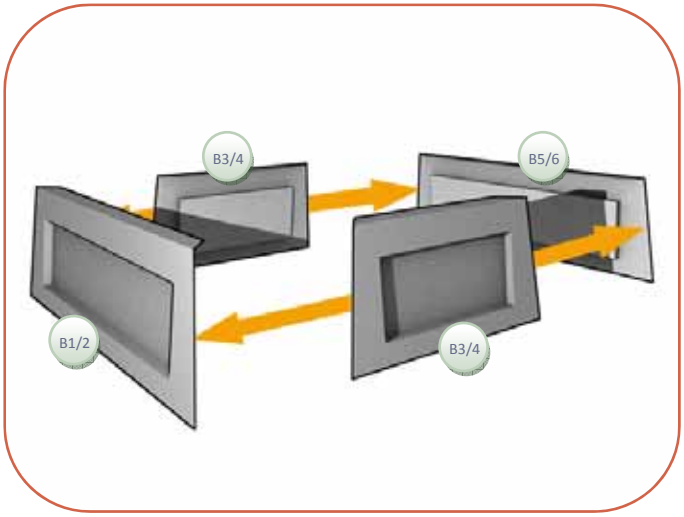

8. Glue the assembled side panels together as shown.

Model design ©2008 Robert Nava, The Disney Experience (www.disneyexperience.com). Any and all trademarks & copyrights are the properties of their respective owners. This fan-created model is not for sale or redistribution.

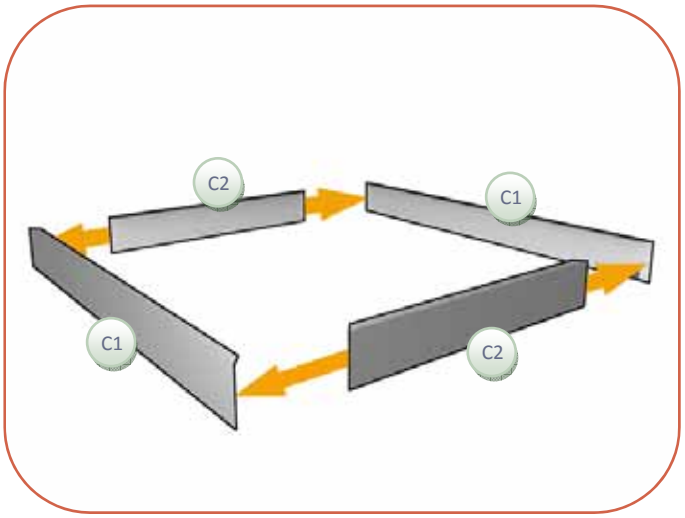

9. Glue pieces C1 & C2 together as shown.

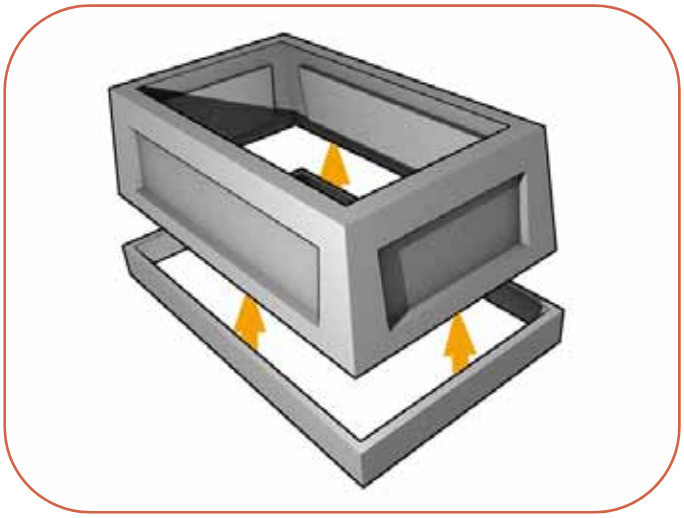

10. Glue the base assembly to bottom rim of the box sides.

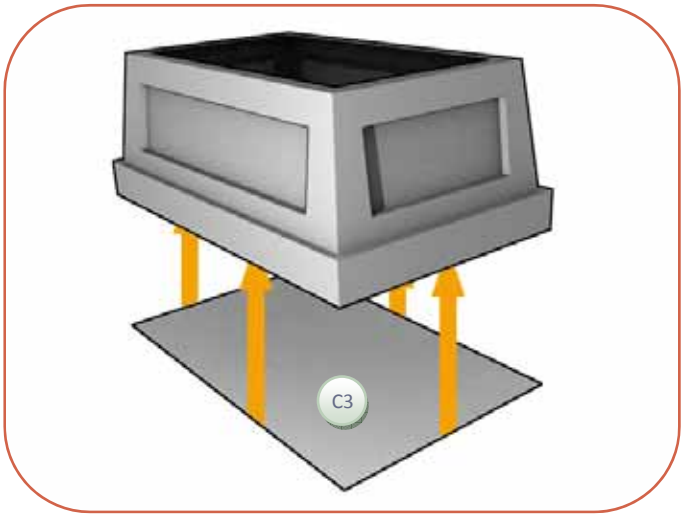

11. Glue piece C3 to the bottom of the base.

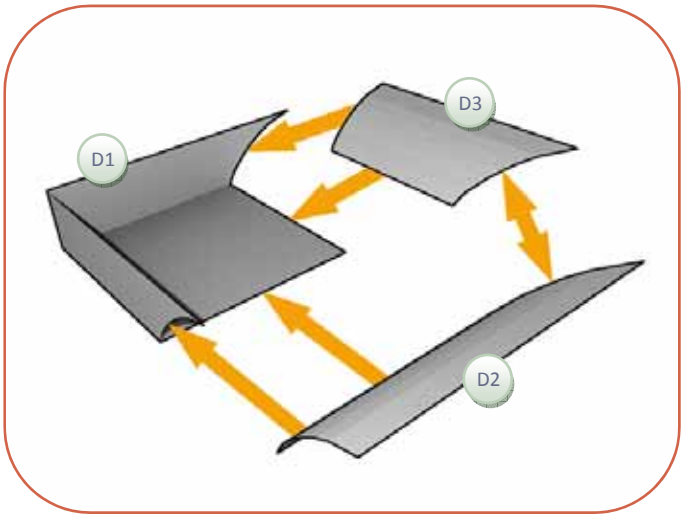

12. Assemble piece D1, printed side facing outward.
13. Glue pieces D1-D3 as shown.

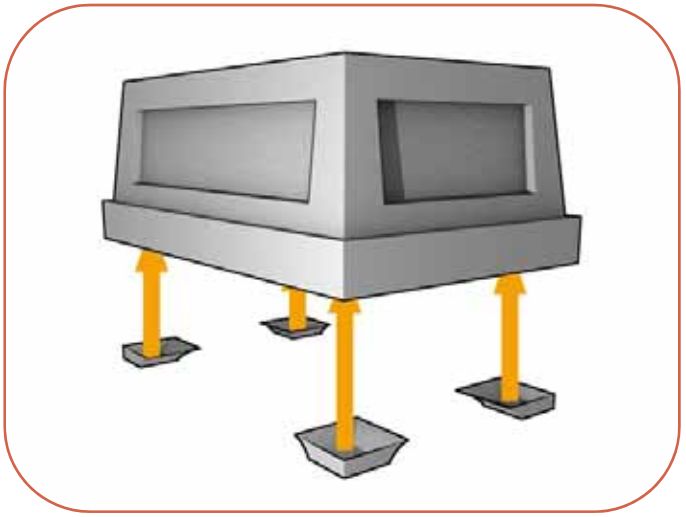

14. Glue the feet to the underside of the base as shown. The curved, pointed corners should point toward the center.

Model design ©2008 Robert Nava, The Disney Experience (www.disneyexperience.com). Any and all trademarks & copyrights are the properties of their respective owners. This fan-created model is not for sale or redistribution.

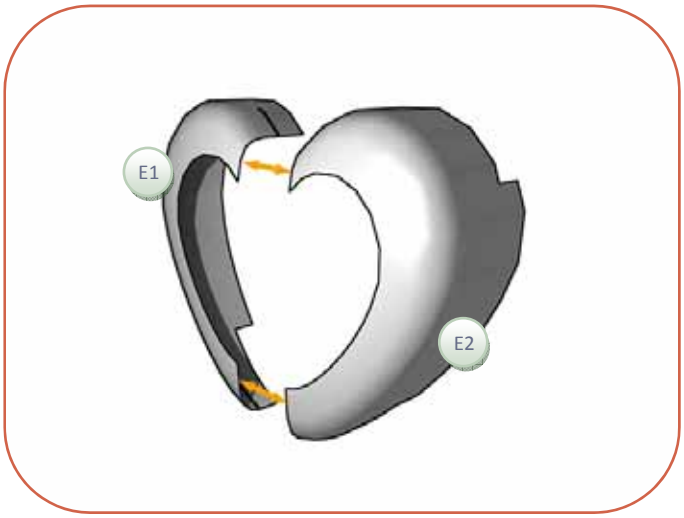

15. Assemble pieces E1 & E2 as shown, printed sides facing outward. Take your time assembling these pieces. Be sure to cut out the upper and lower slits, and do not glue them shut. The dagger will slide through the slits when assembly is complete.

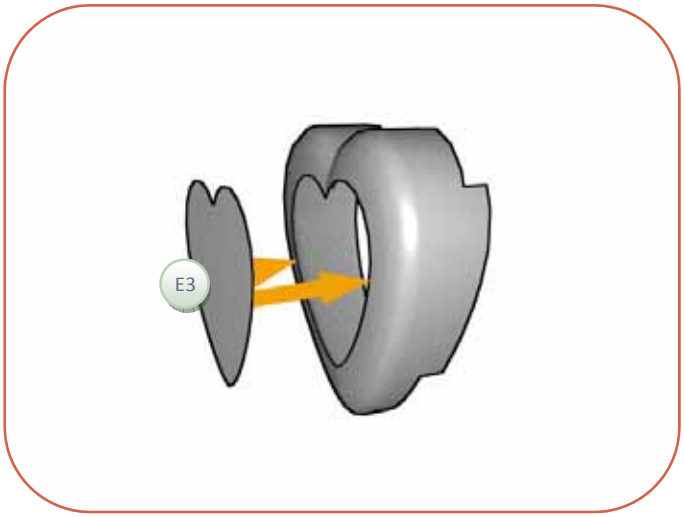

16. Glue piece E3 to the front of the heart.

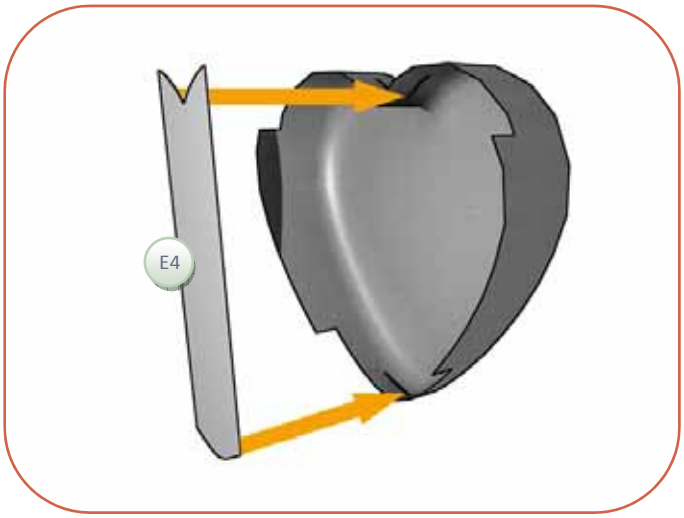

17. Assemble piece E4, folding it into a flat tube. The tabs on the top and bottom should be folded out to the sides (do not glue together).
18. Glue piece E4 to the inside of the heart assembly, aligning the ends with the slits in the heart. Insert your X-acto knife through the slits and into the ends of piece E4 to ensure proper alignment. This will also clear out any glue. It is important that the path is clear so that the dagger can smoothly slide through.

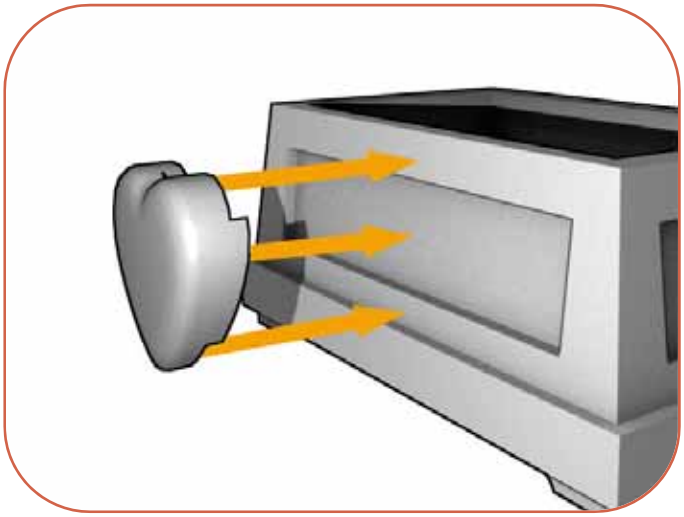

19. Glue the heart assembly to the front of the box assembly.

Model design ©2008 Robert Nava, The Disney Experience (www.disneyexperience.com). Any and all trademarks & copyrights are the properties of their respective owners. This fan-created model is not for sale or redistribution.

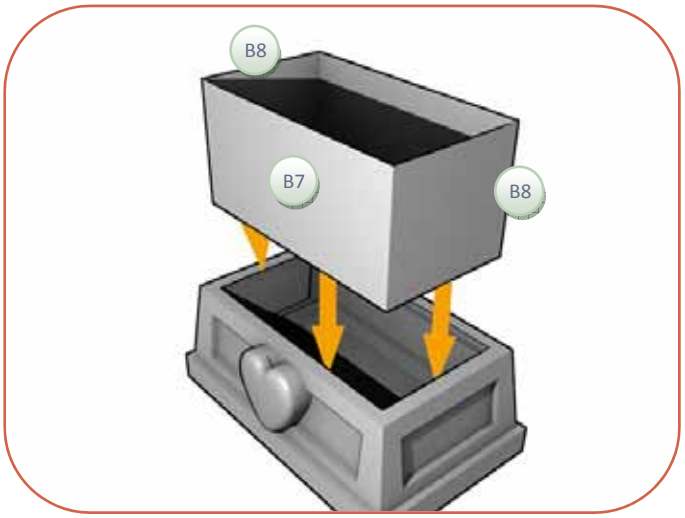

20. Glue pieces B7 & B8 together to form the box's interior. Make sure that the printed sides face inward.
21. Glue the interior assembly to the inside of the box assembly.

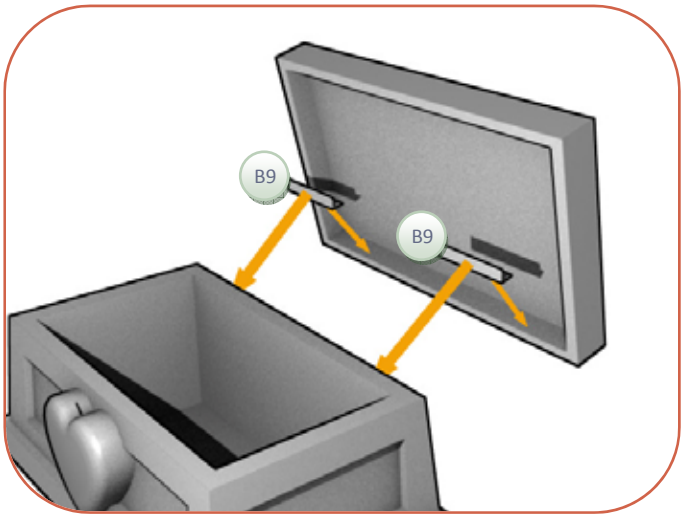

22. Fold & glue pieces B9 to the blank areas inside the lid assembly as shown.
23. Glue pieces B9 to the backside of the box assembly.

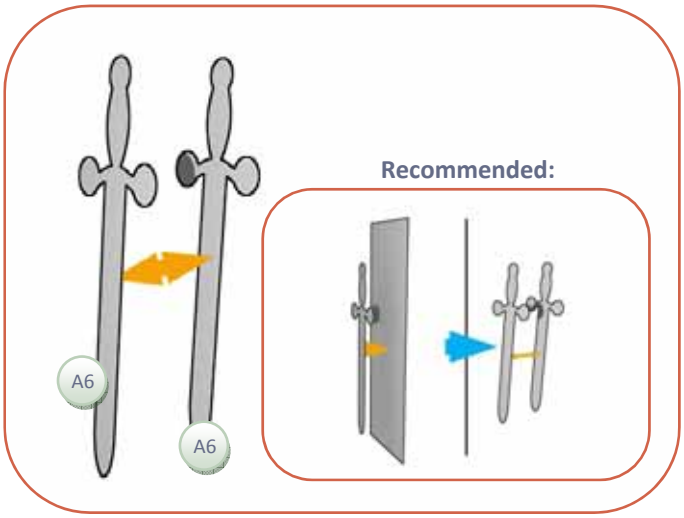

24. Glue pieces A6 together. It's recommended that you use a piece of thin cardstock between the pieces to strengthen them. An index card works well.

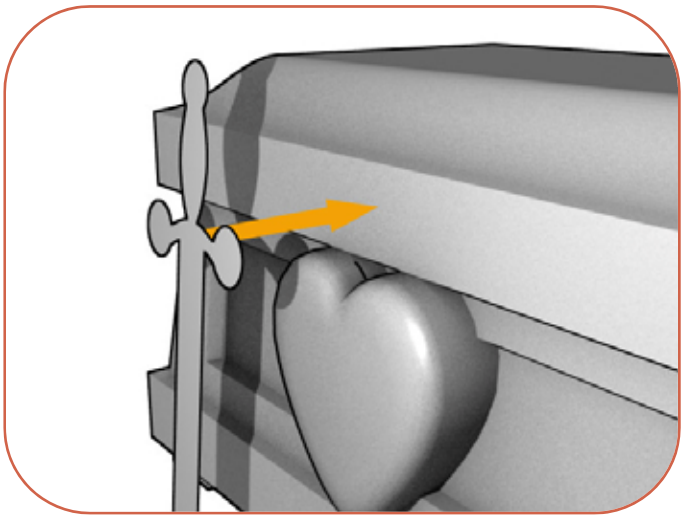

25. Glue the dagger to the front of the lid. When dry, the dagger can be inserted through the heart when the lid is in the closed position.

Congratulations; you've completed the model!

Model design ©2008 Robert Nava, The Disney Experience (www.disneyexperience.com). Any and all trademarks & copyrights are the properties of their respective owners. This fan-created model is not for sale or redistribution.