NOT FOR SALE

DENDOH

GEAR FIGHTER

Color Guide

A–B	WHITE	2
C–H	BLACK	6
I–L	GRAY	4
M–R	BLUE	6
S	RED	1
T	YELLOW	1

MODELING BY CREAM-BREAD

INFORMATION	
1–9	HEAD
10	CHEST

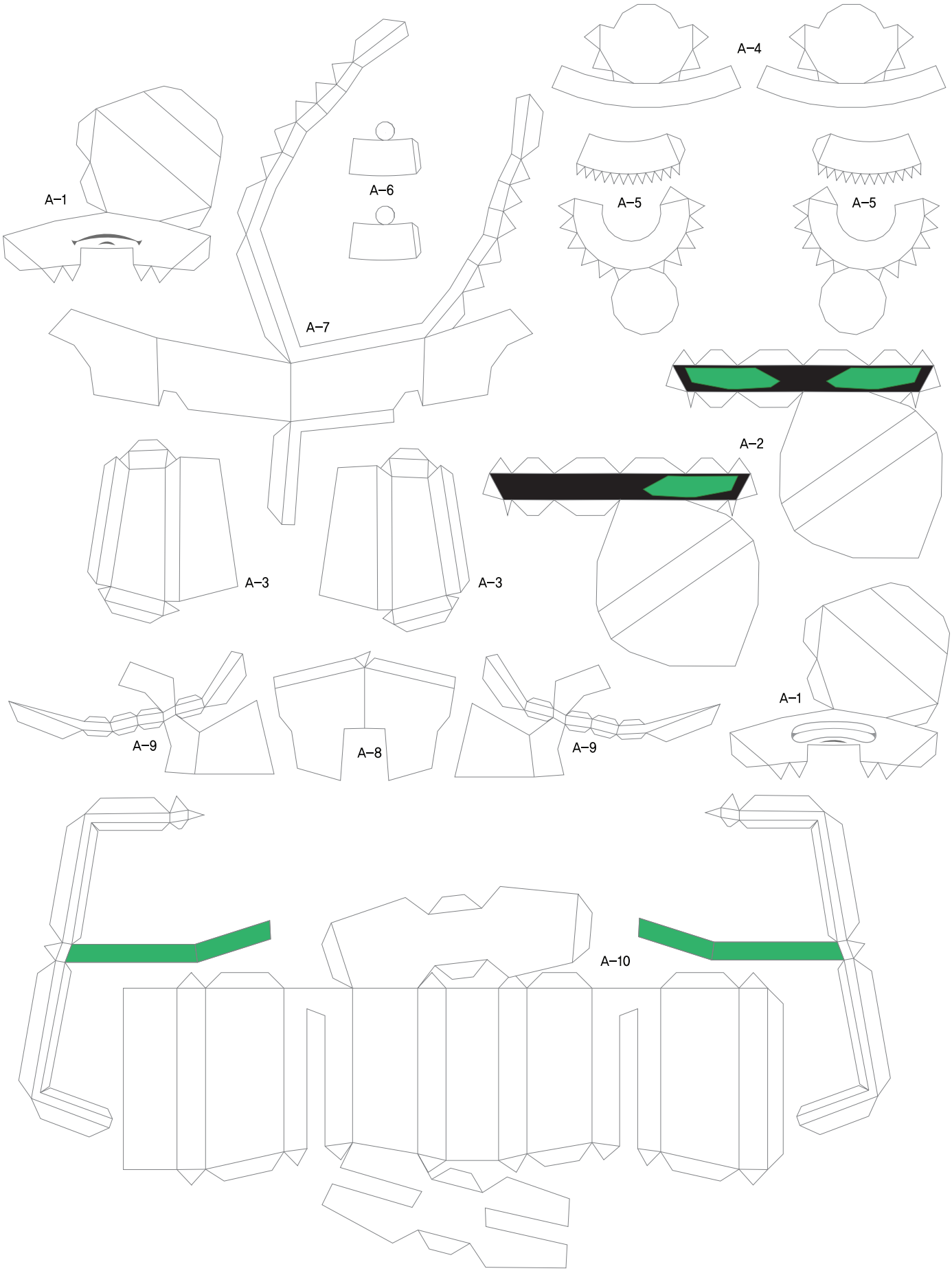

B white

MODELING BY CREAM-BREAD / **GEAR FIGHTER DENDOH**

INFORMATION			
1–5	CHEST	8	R.LEG
6	R.ARM	9	L.LEG
7	L.ARM		

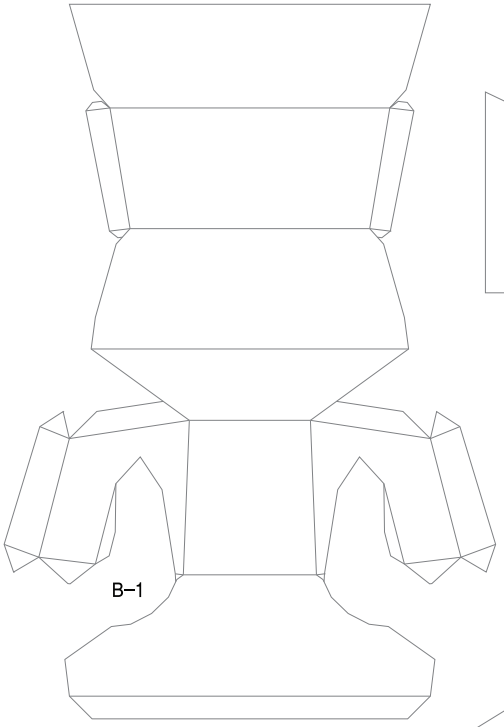
B–1

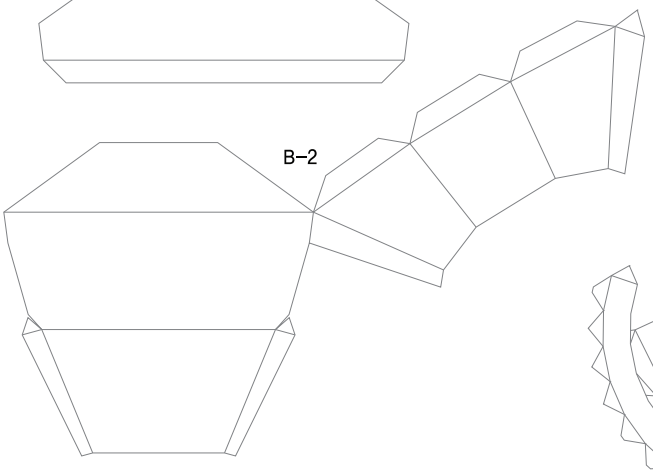
B–2

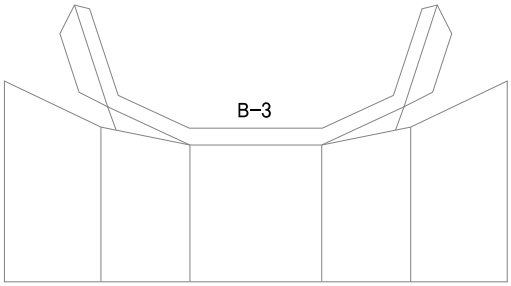
B–3

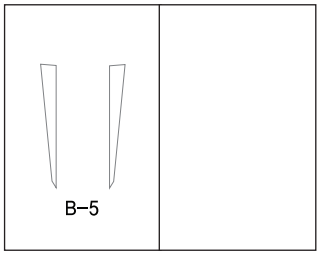
B–5

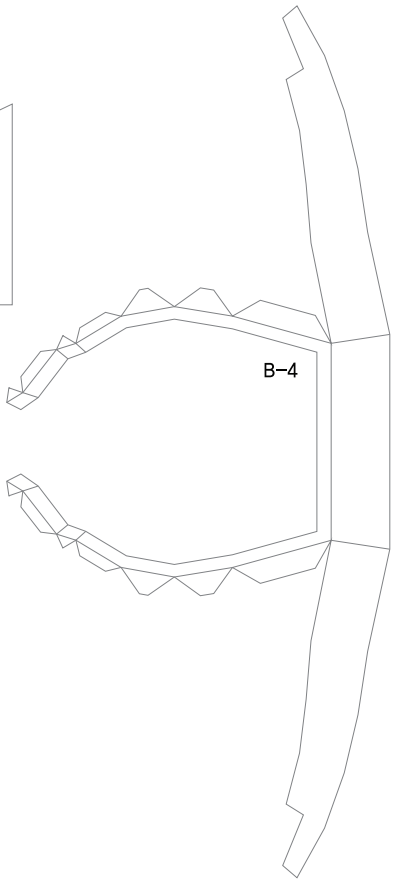
B–4

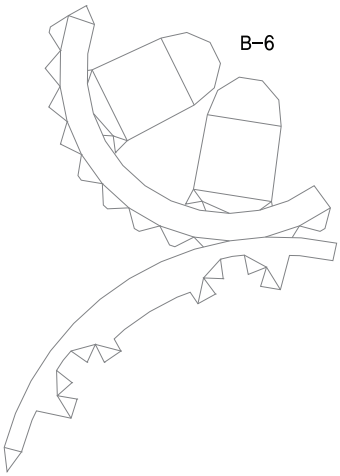
B–6

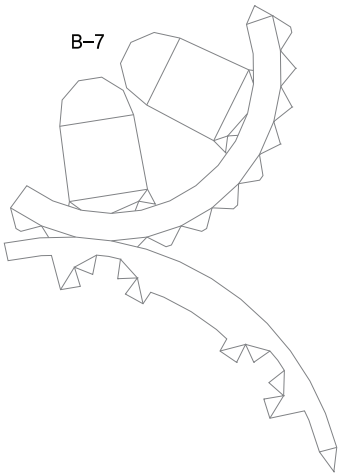
B–7

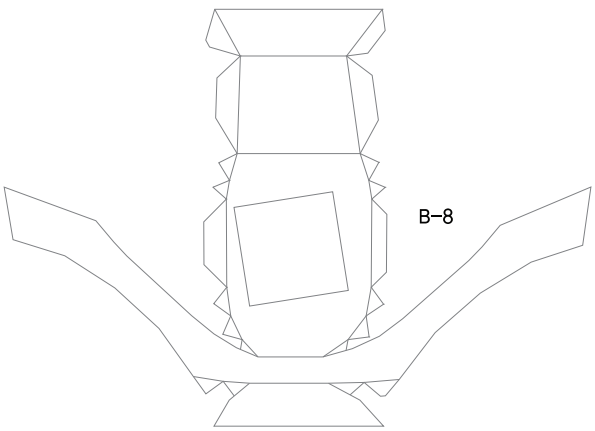
B–8

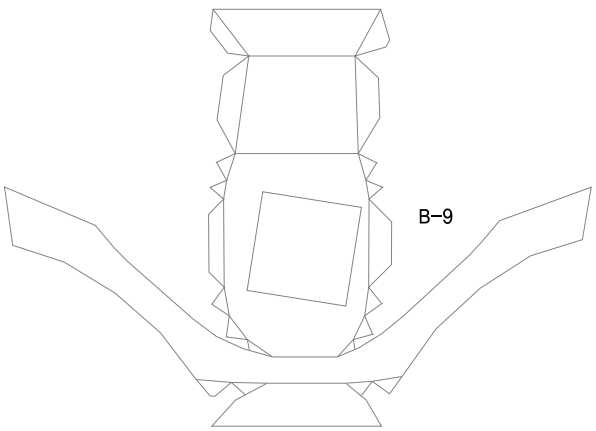
B–9

INFORMATION
1–13 HEAD

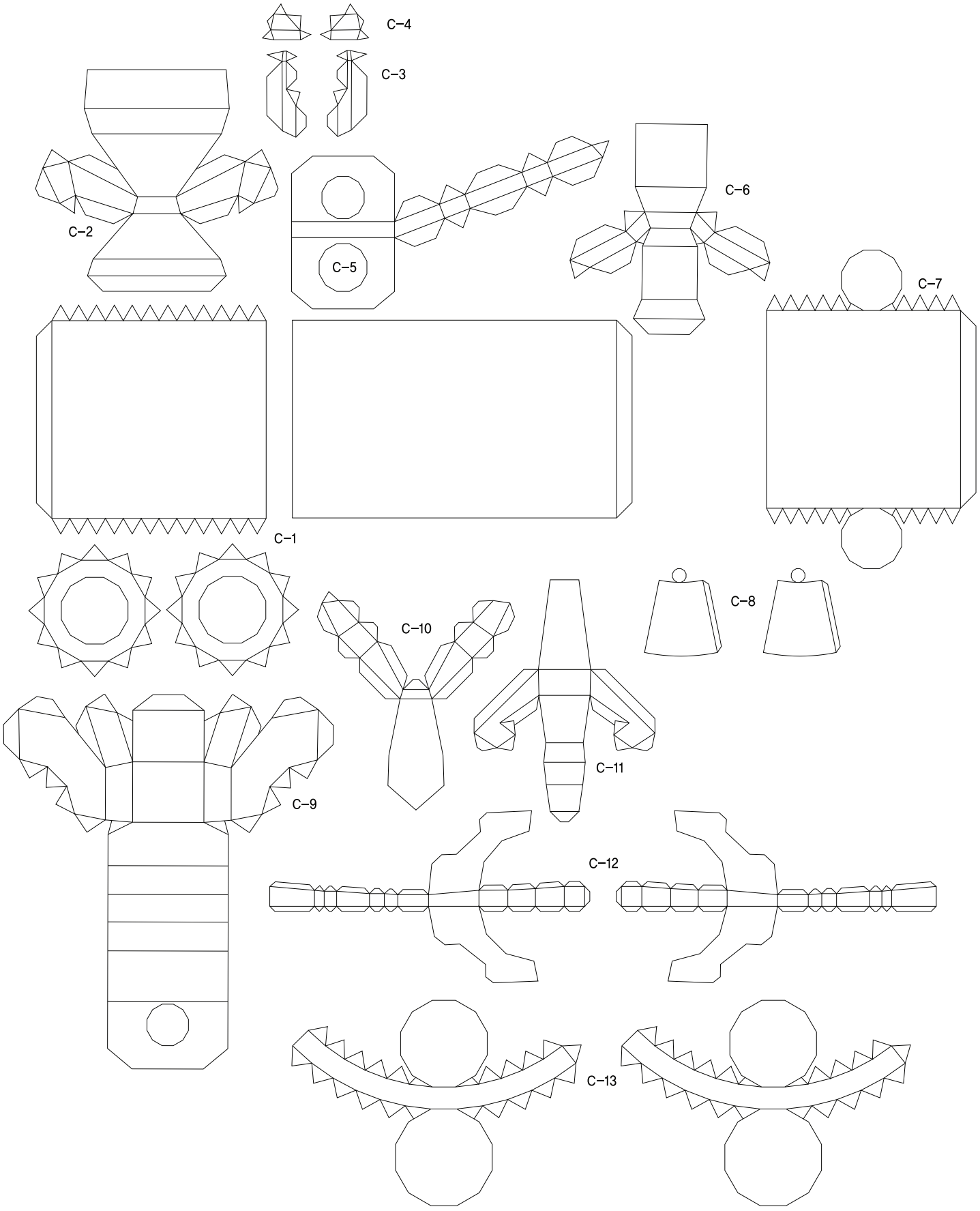

INFORMATION	
1–15	CHEST
16–23	PELVIS

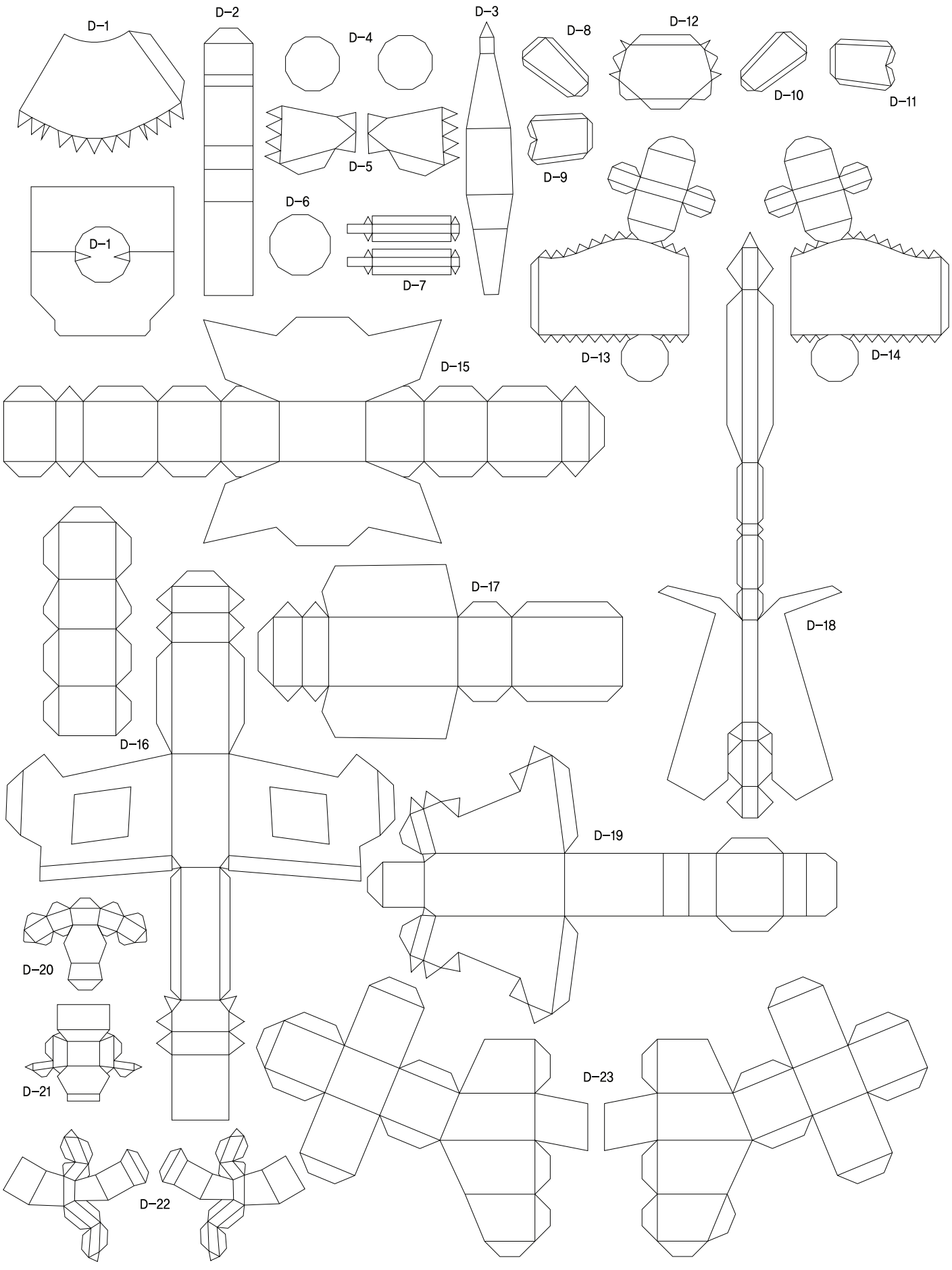

INFORMATION			
1–2	PELVIS	4	R.LEG
3	LEG	5	L.LEG

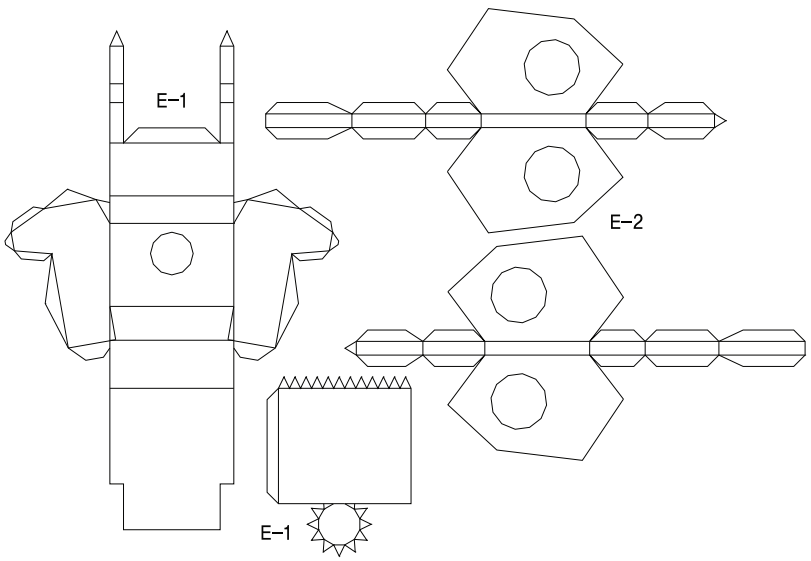

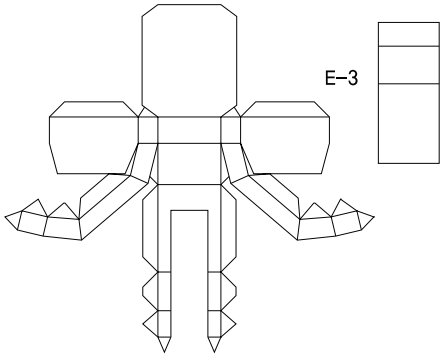

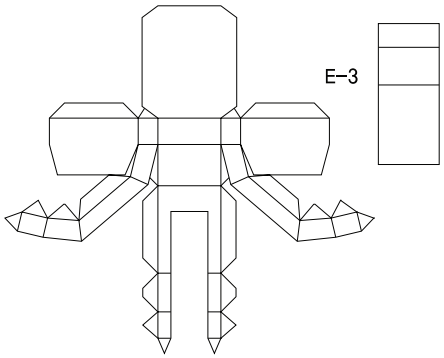





F black

MODELING BY CREAM-BREAD / GEAR FIGHTER DENDOH

INFORMATION
1–6 LEG

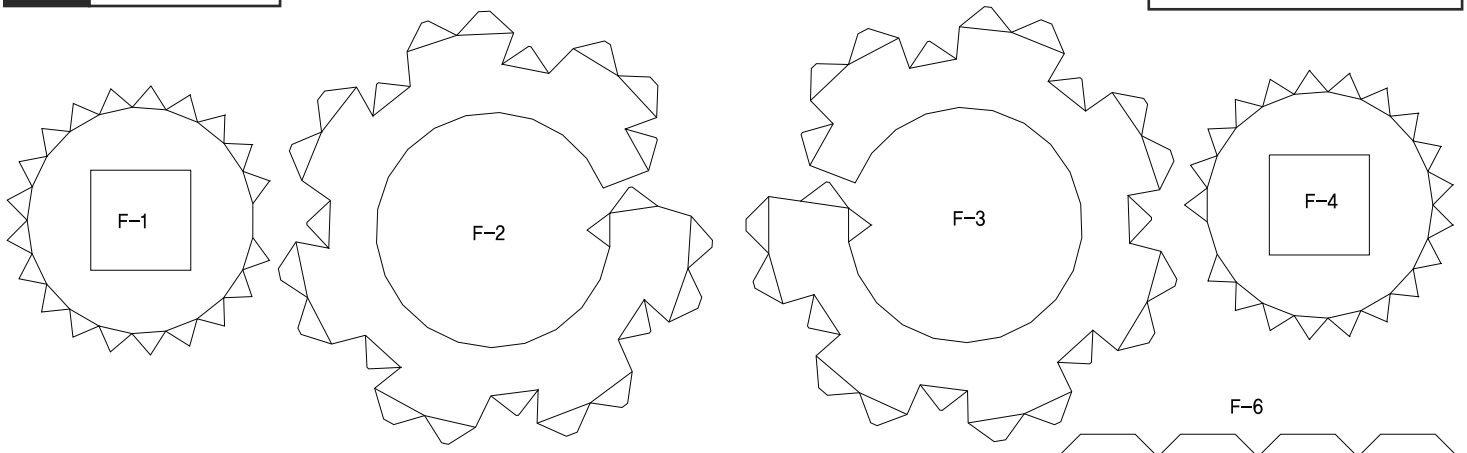

F–6

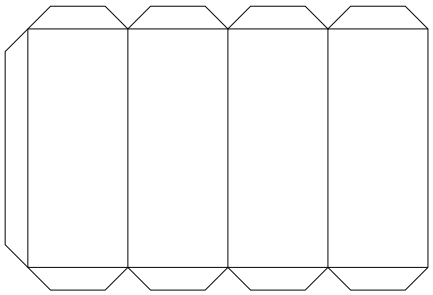

F–5

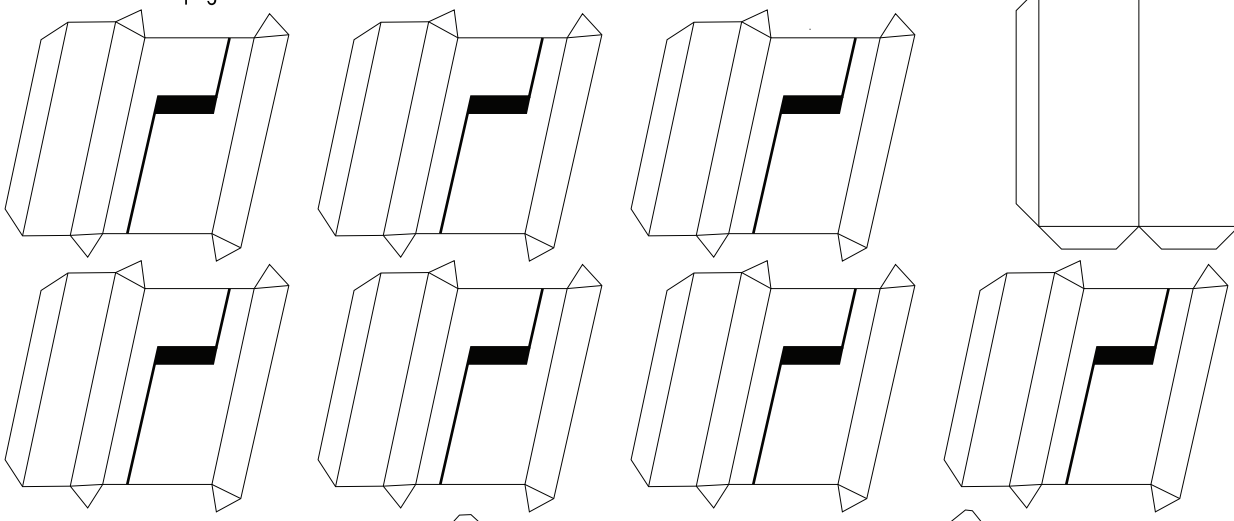

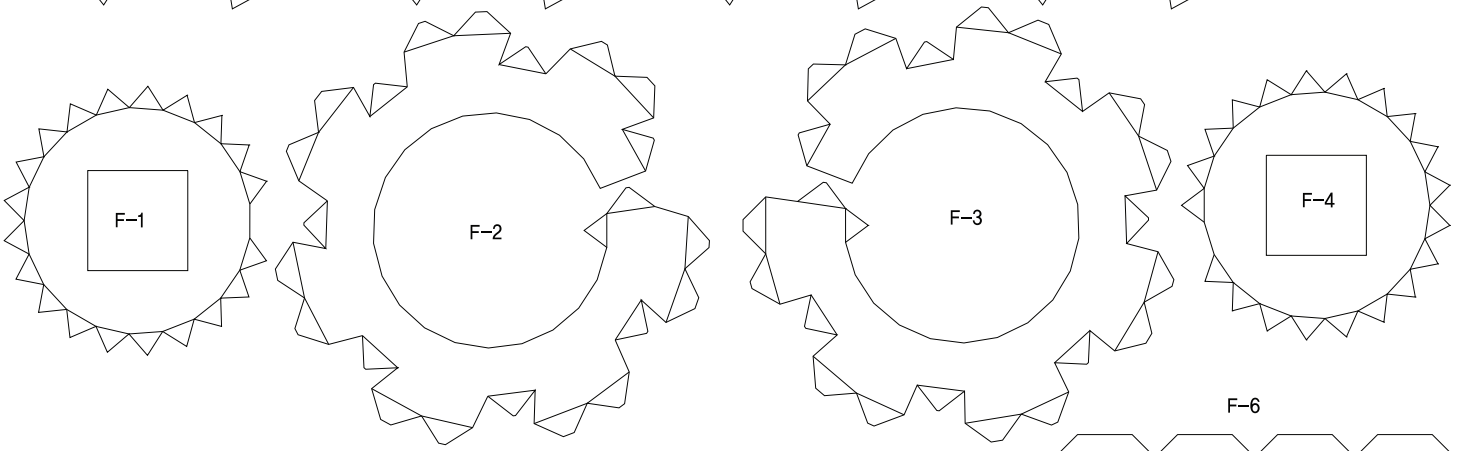

F–6

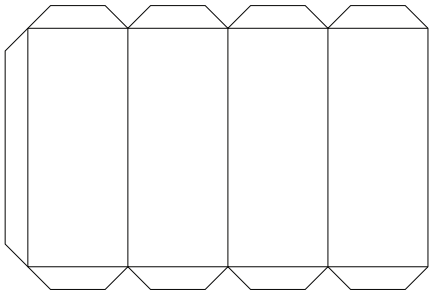

F–5

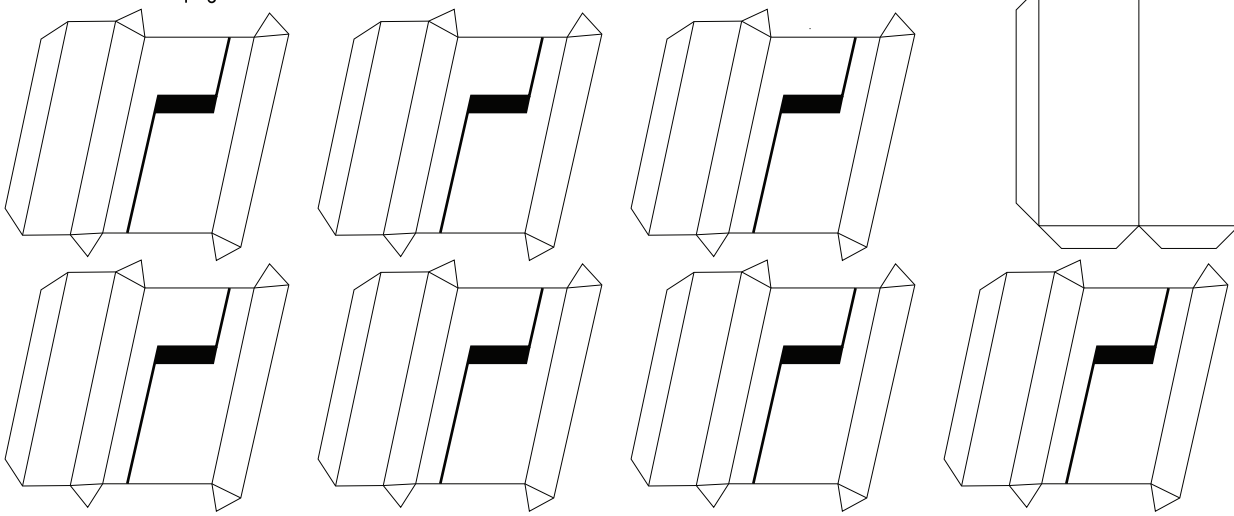

INFORMATION
1–8 R.ARM

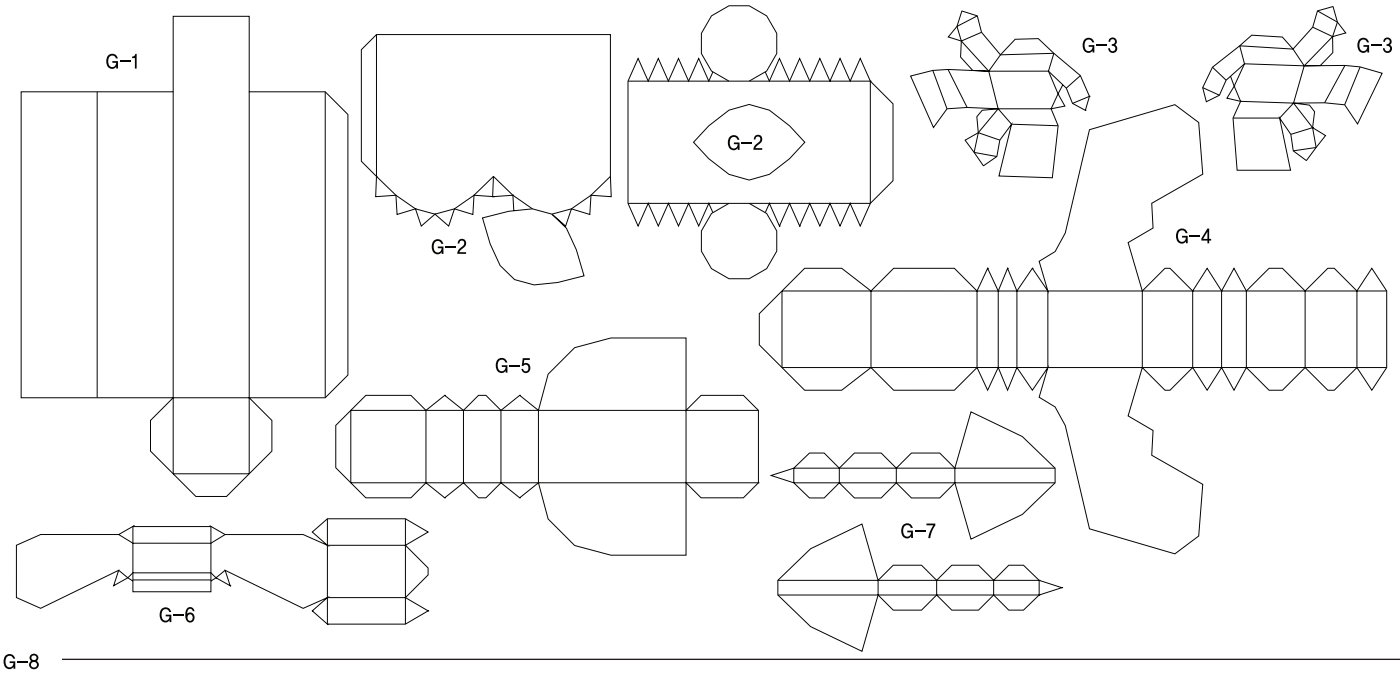

G–8

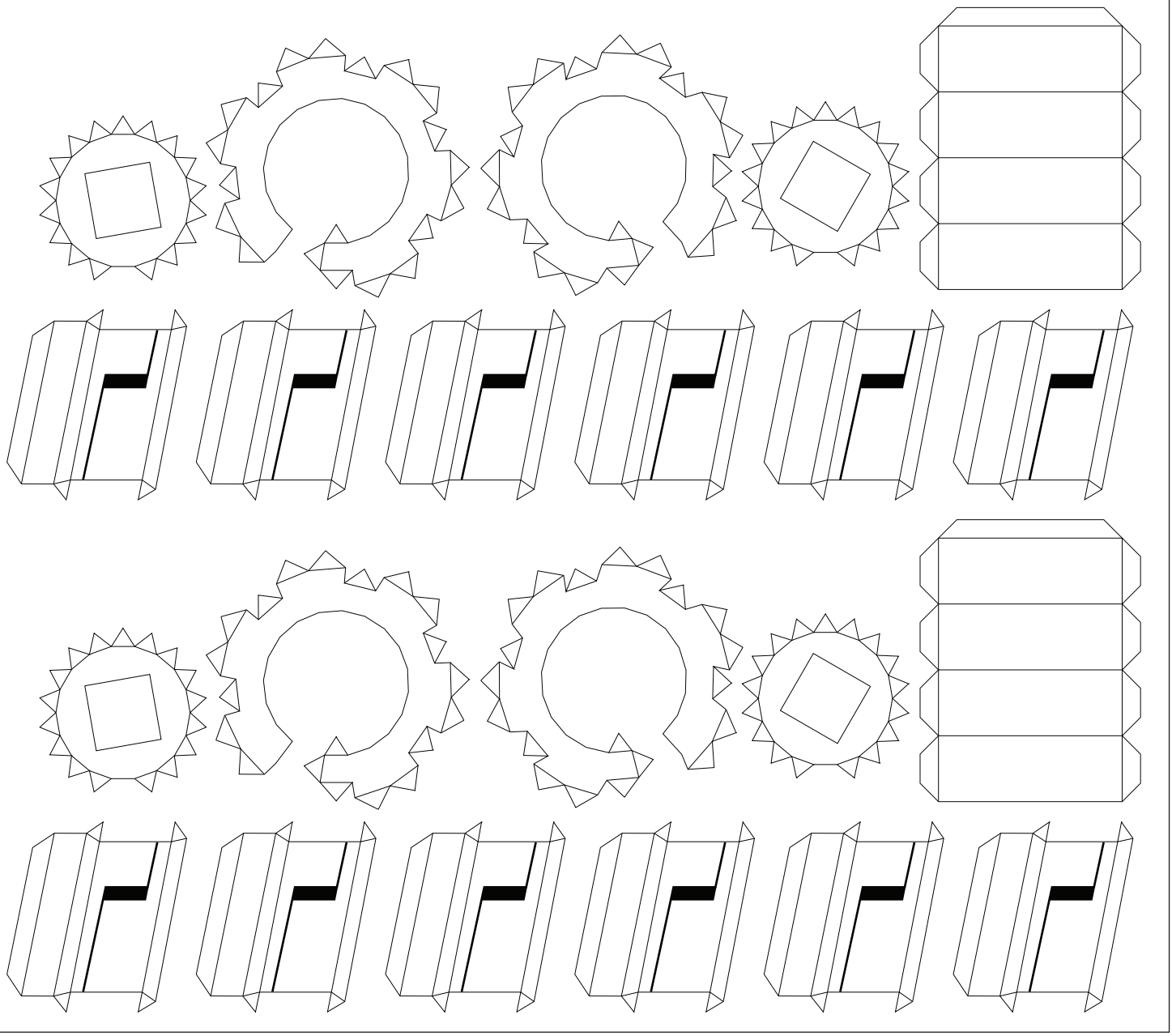

INFORMATION
1–8 L,ARM

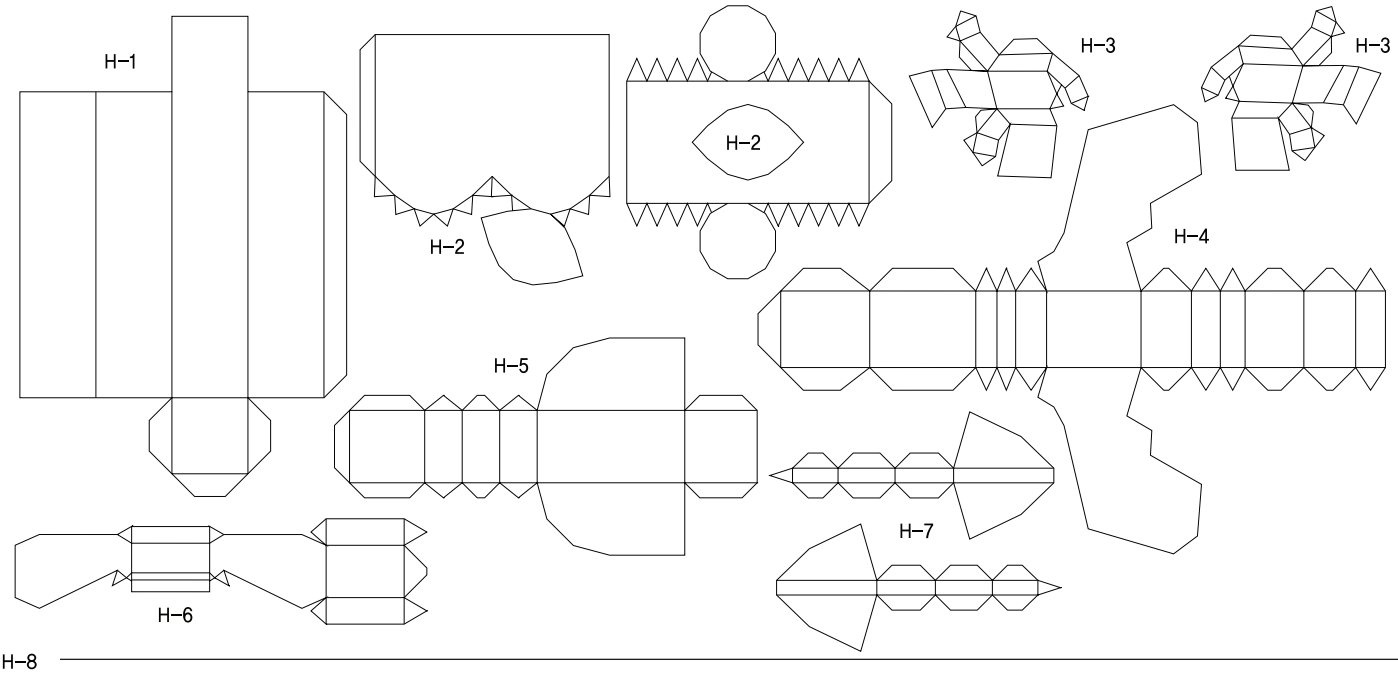

H–8

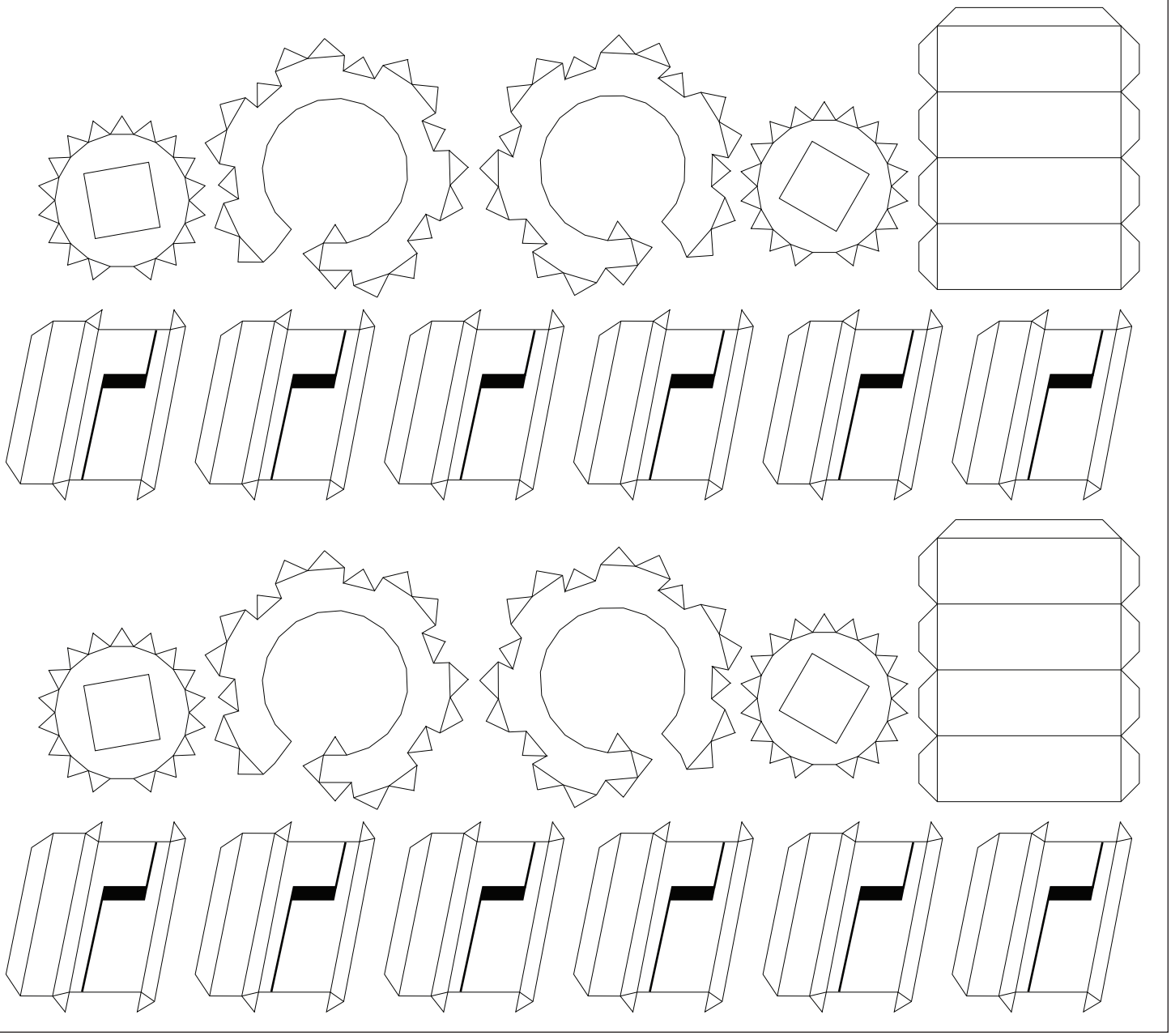

INFORMATION
1–11 R.LEG

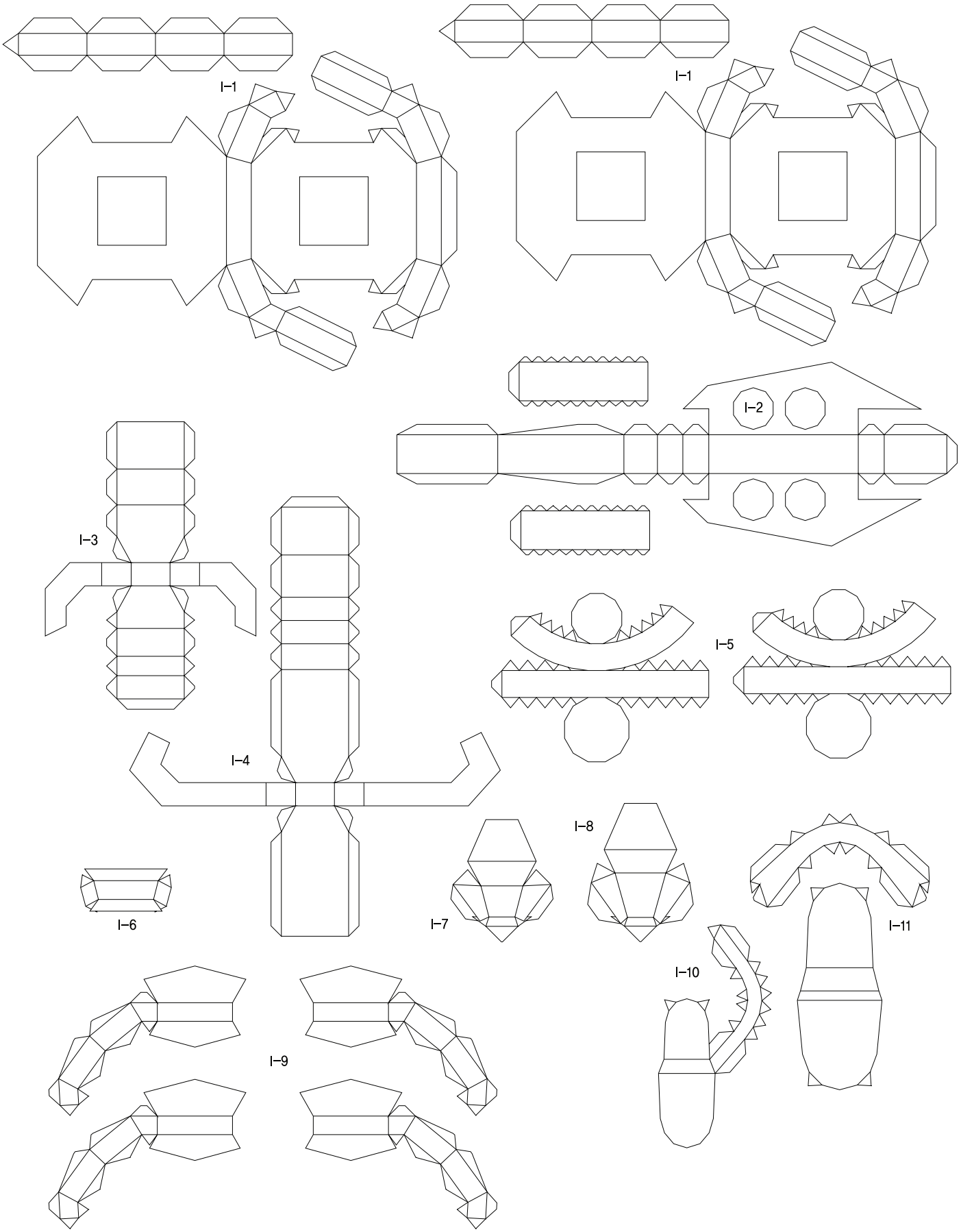

INFORMATION
1–11 L.LEG

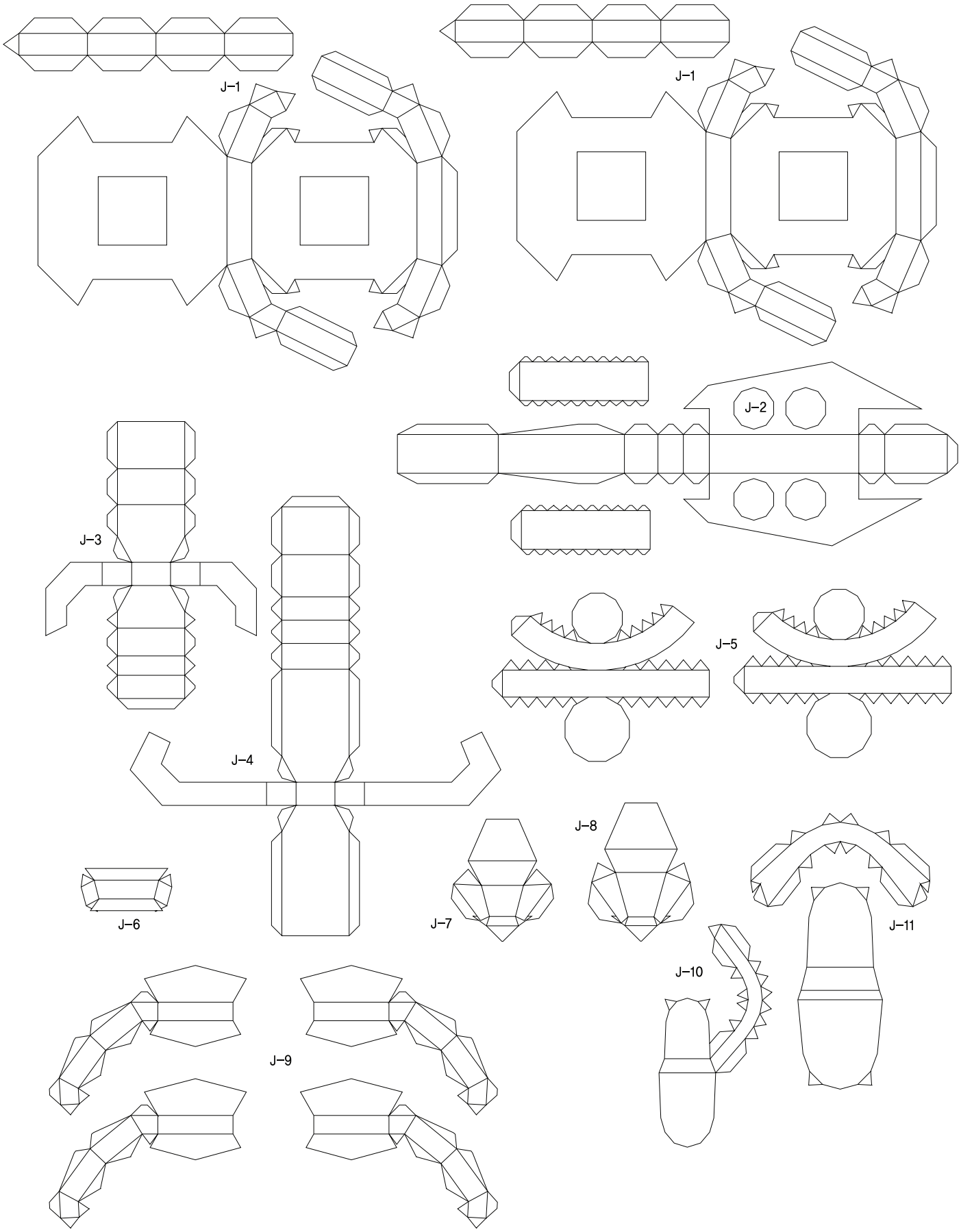

INFORMATION	
1–14	R.ARM
15–17	CHEST

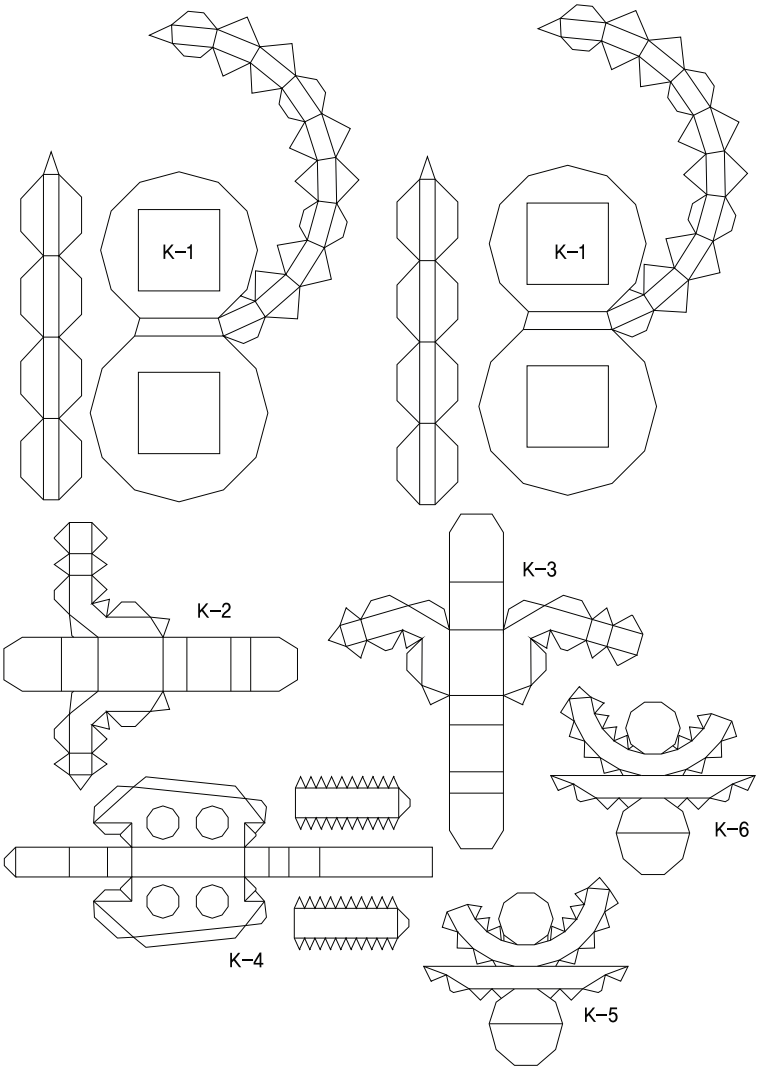

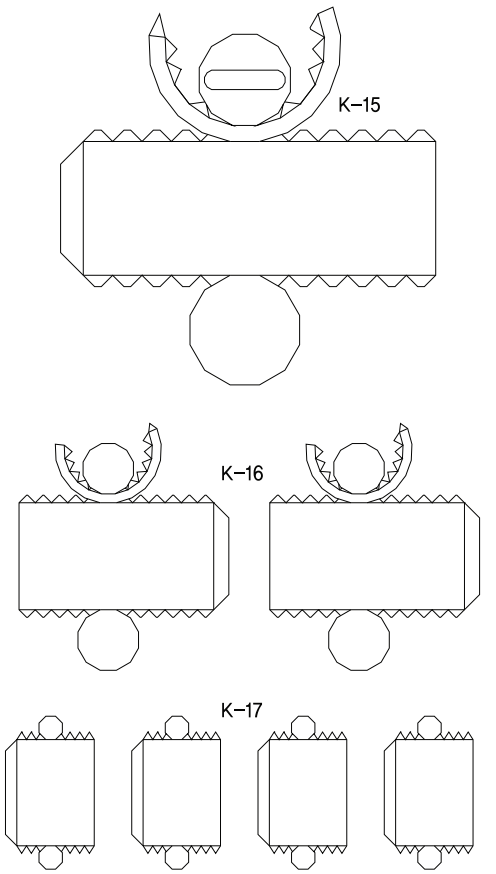

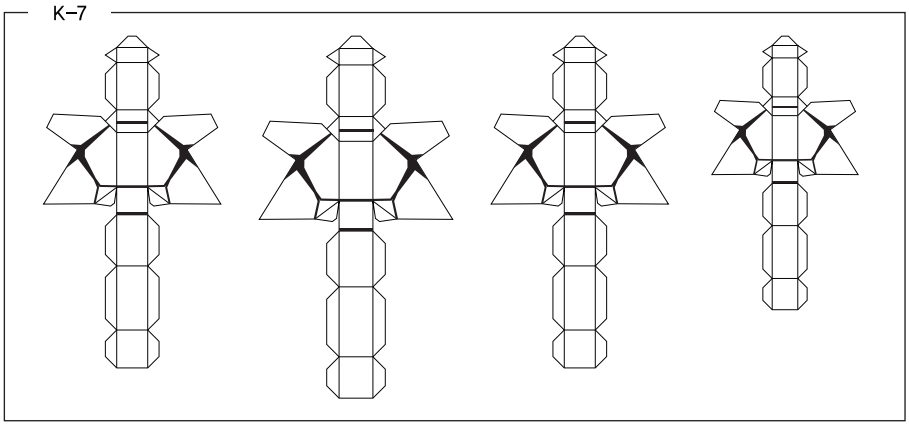

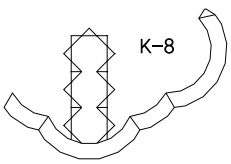

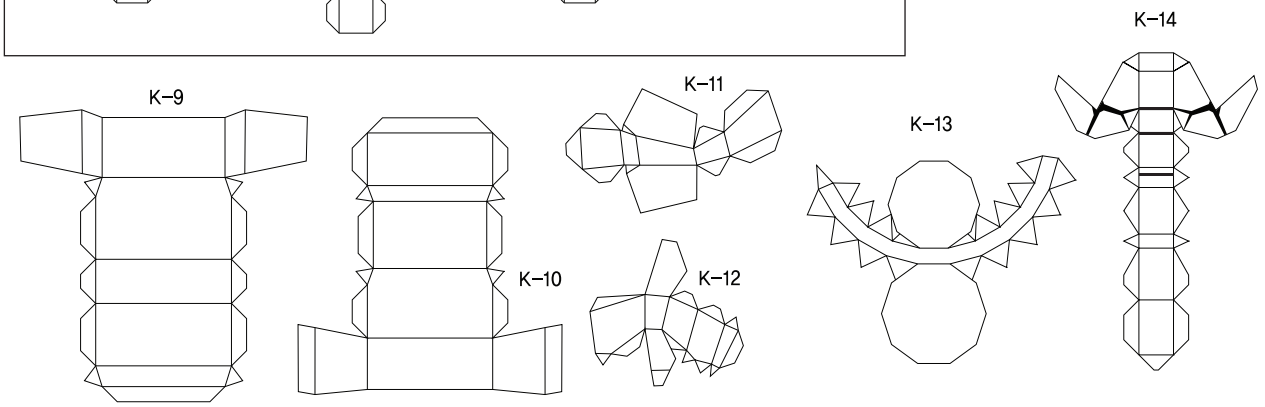

INFORMATION			
1–14	L.ARM	16–17	CHEST
15	HEAD		

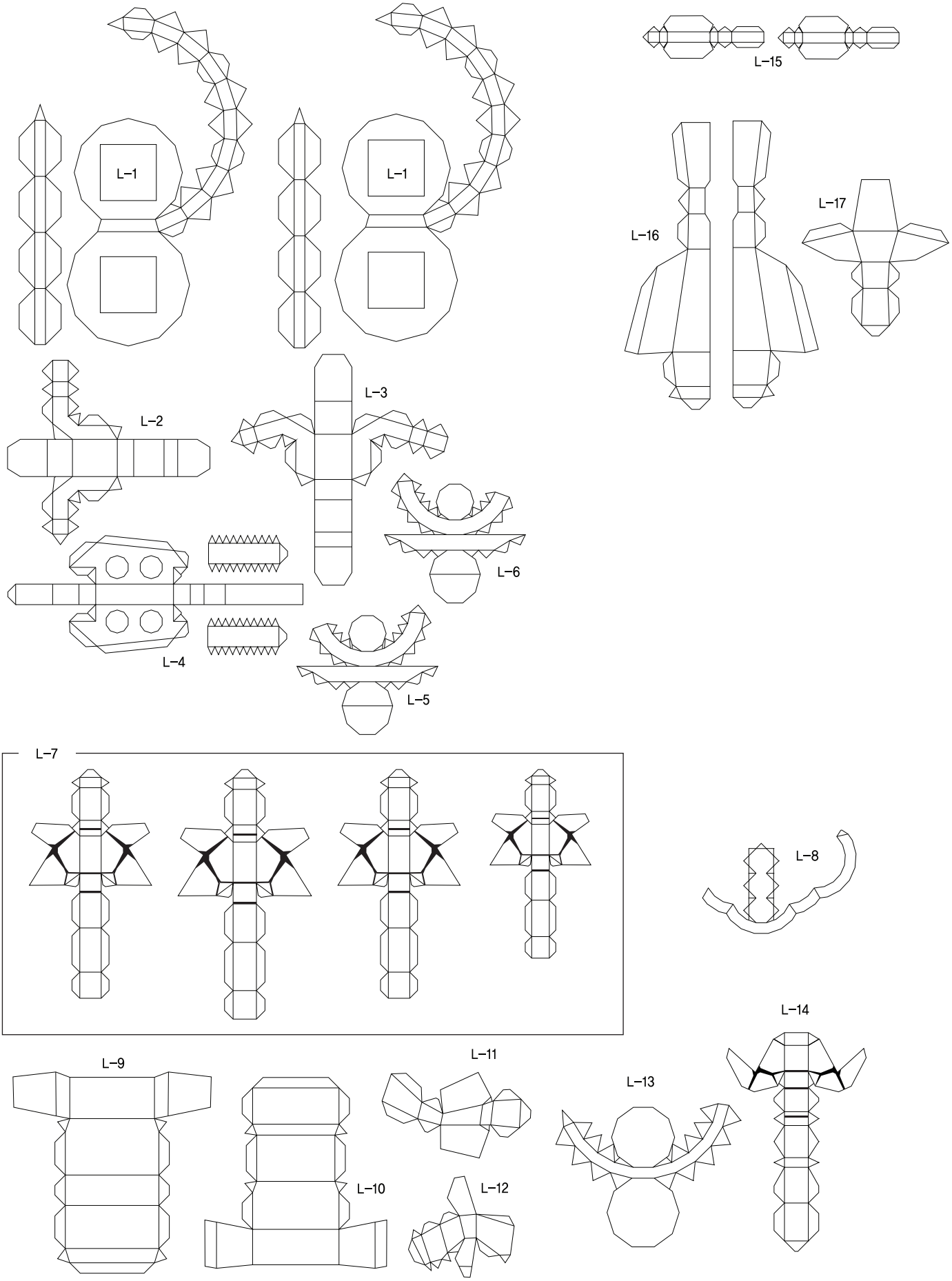

INFORMATION	
1–4	HEAD
5–8	CHEST

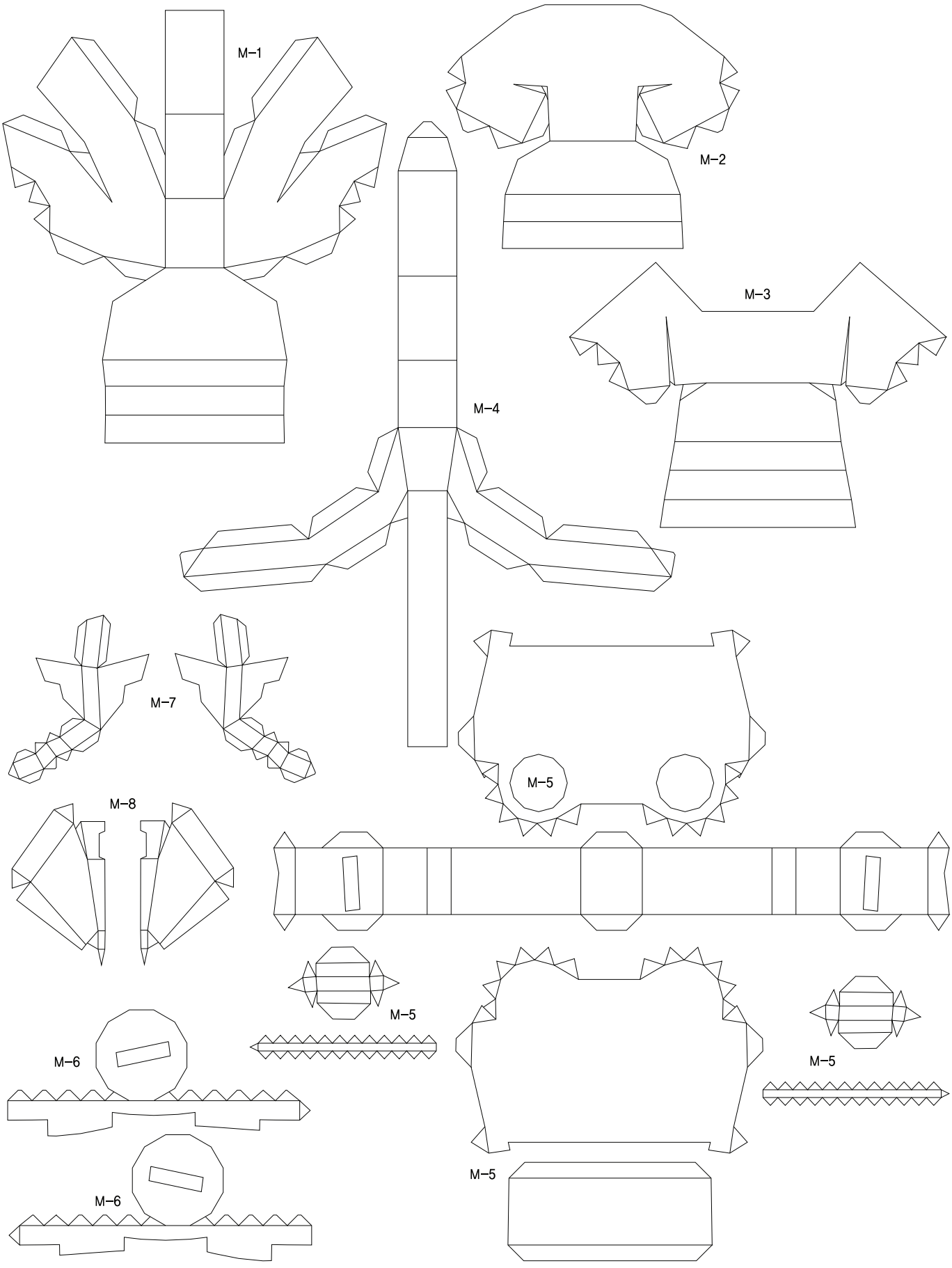

INFORMATION	
1–4	CHEST
5–9	PELVIS

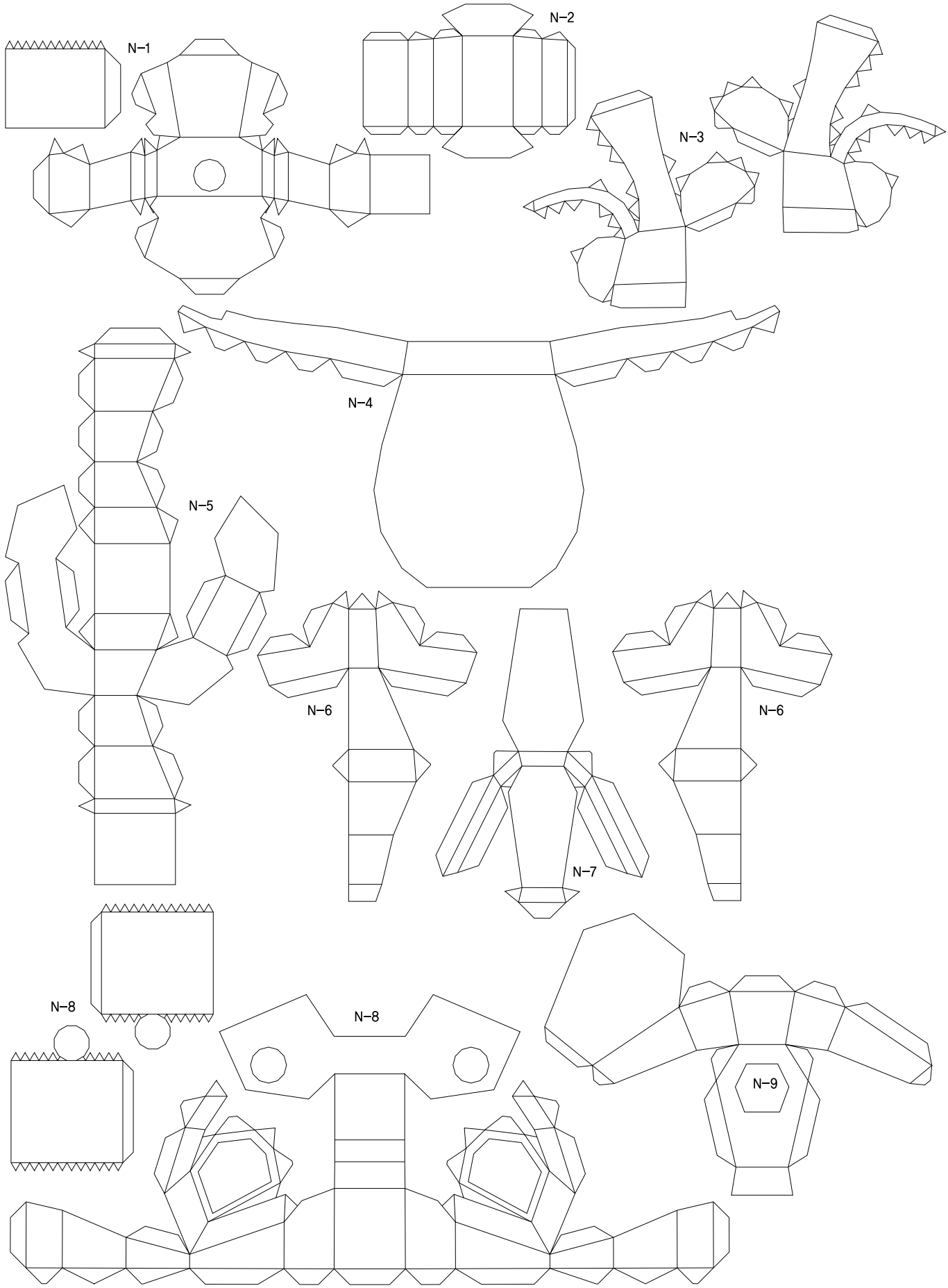

INFORMATION
1–3 PELVIS

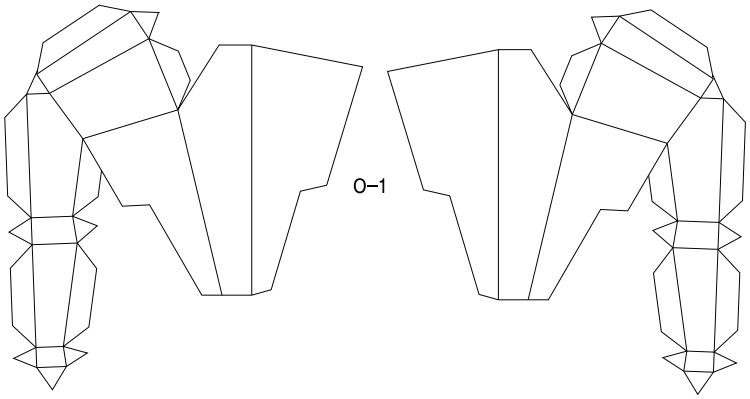

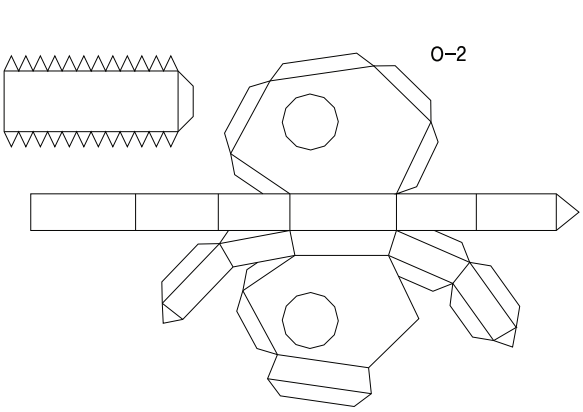

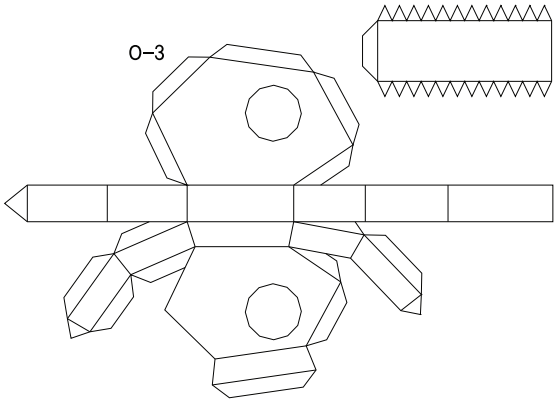

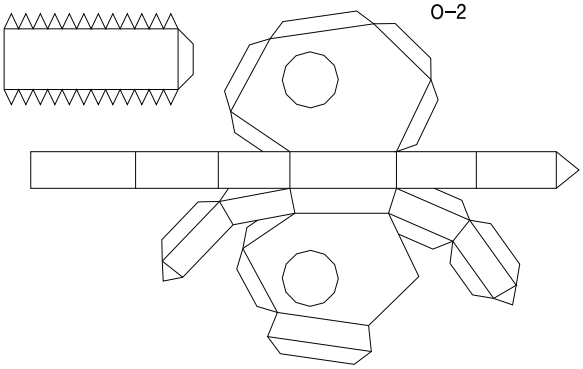

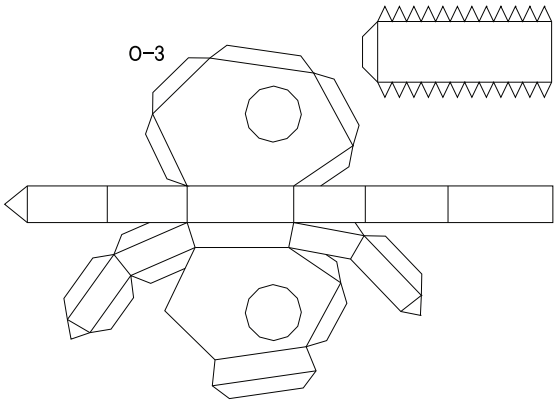

INFORMATION
1–17 R.LEG

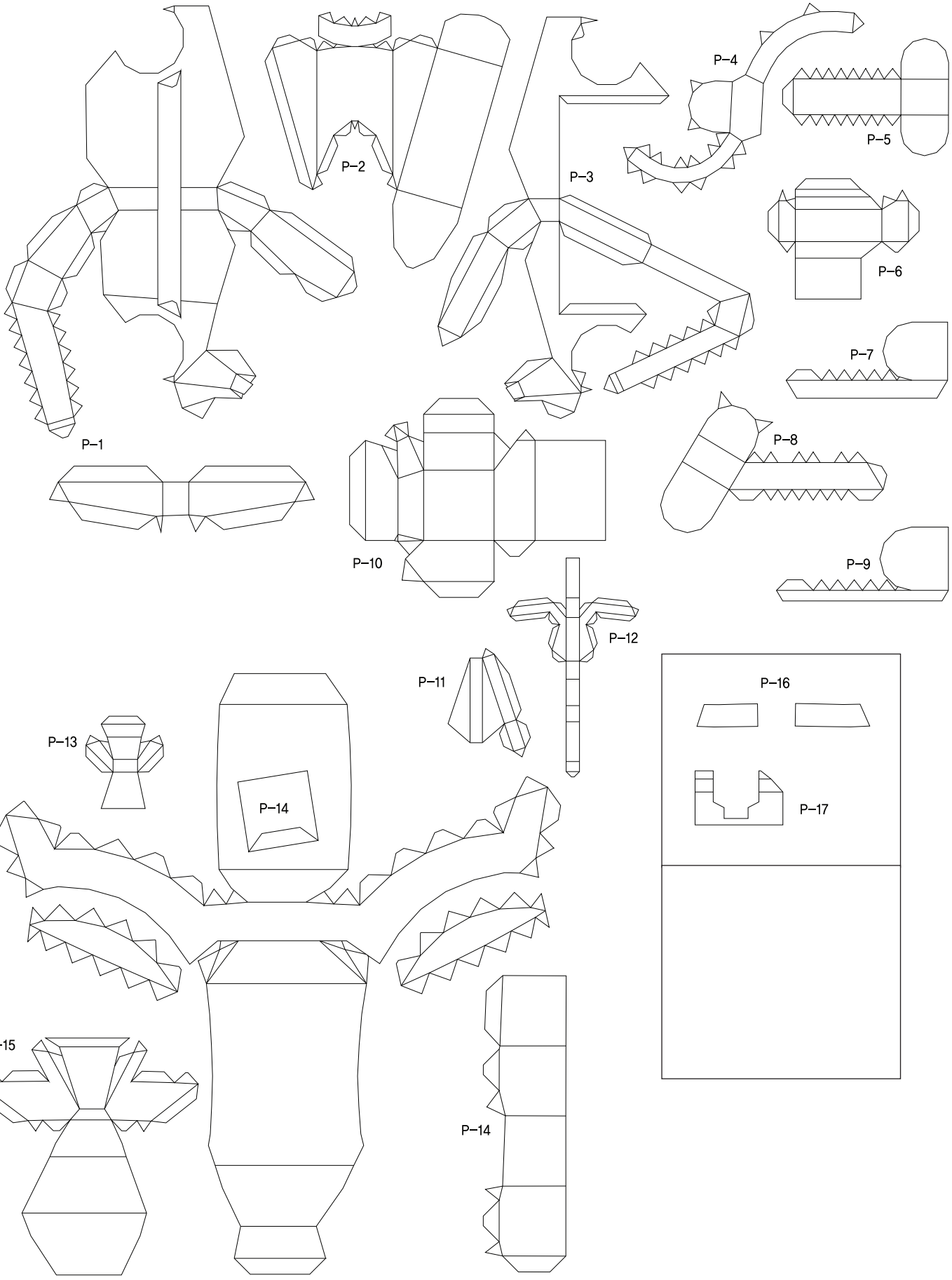

INFORMATION
1–17 L.LEG

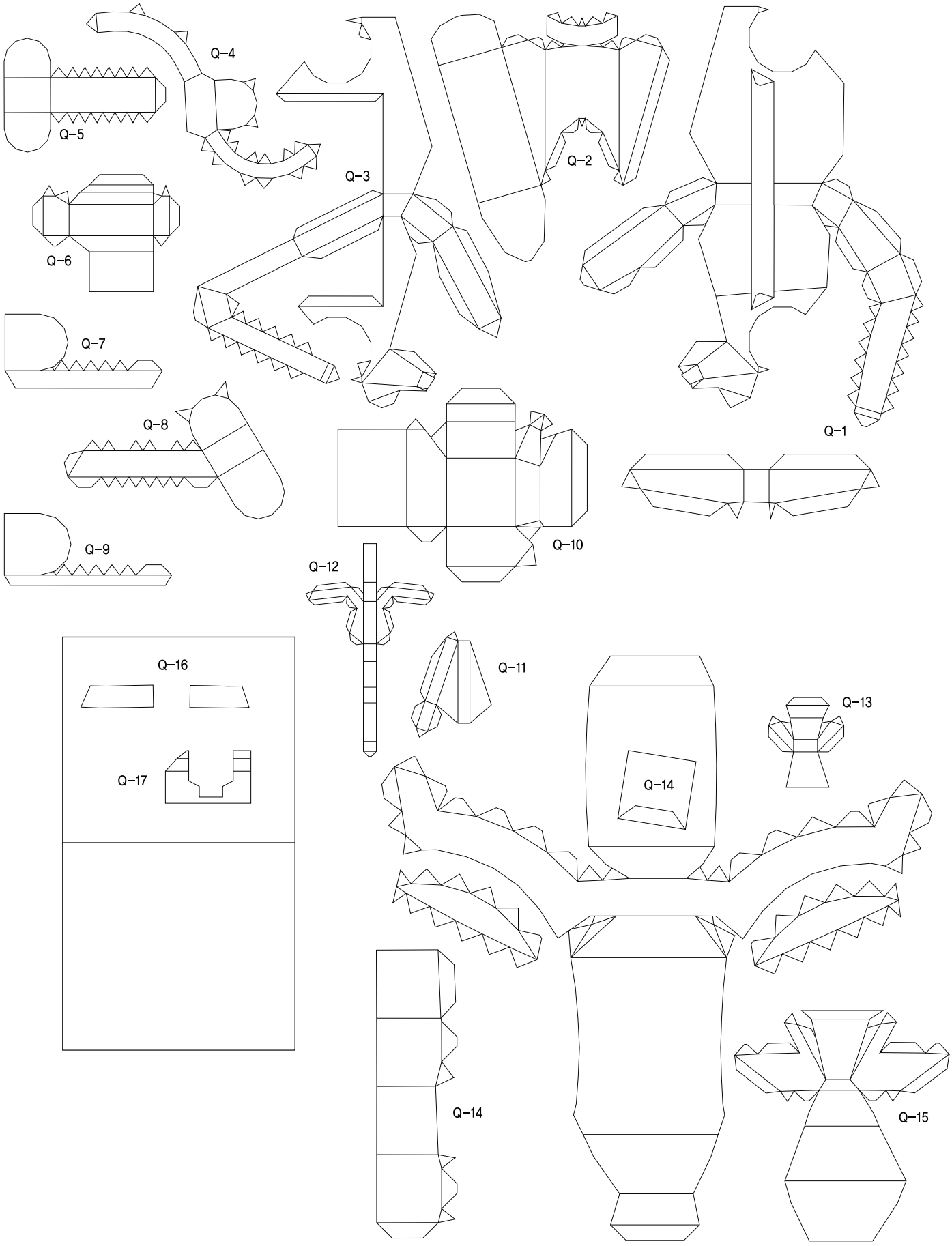

INFORMATION
1–8 ARM

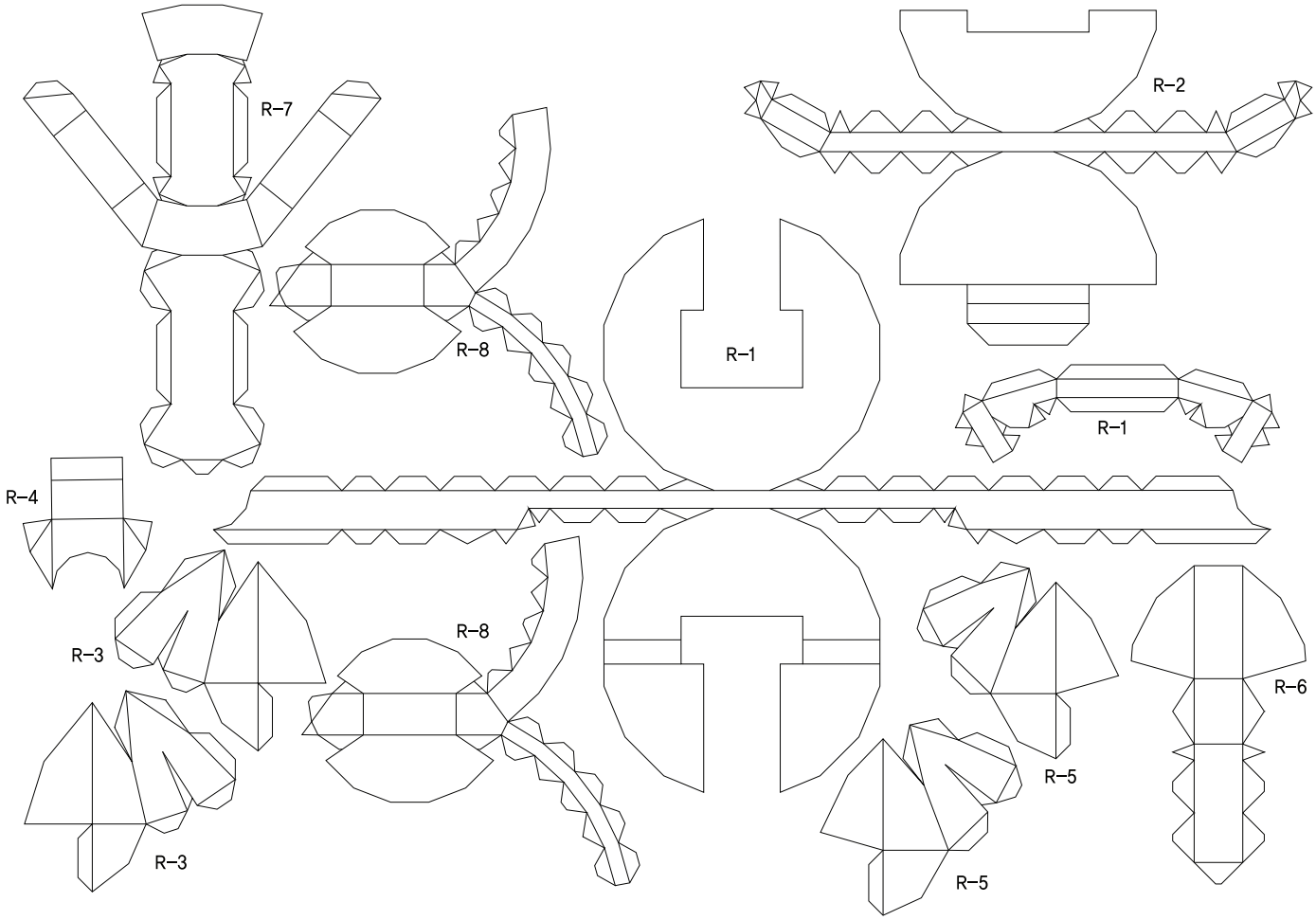

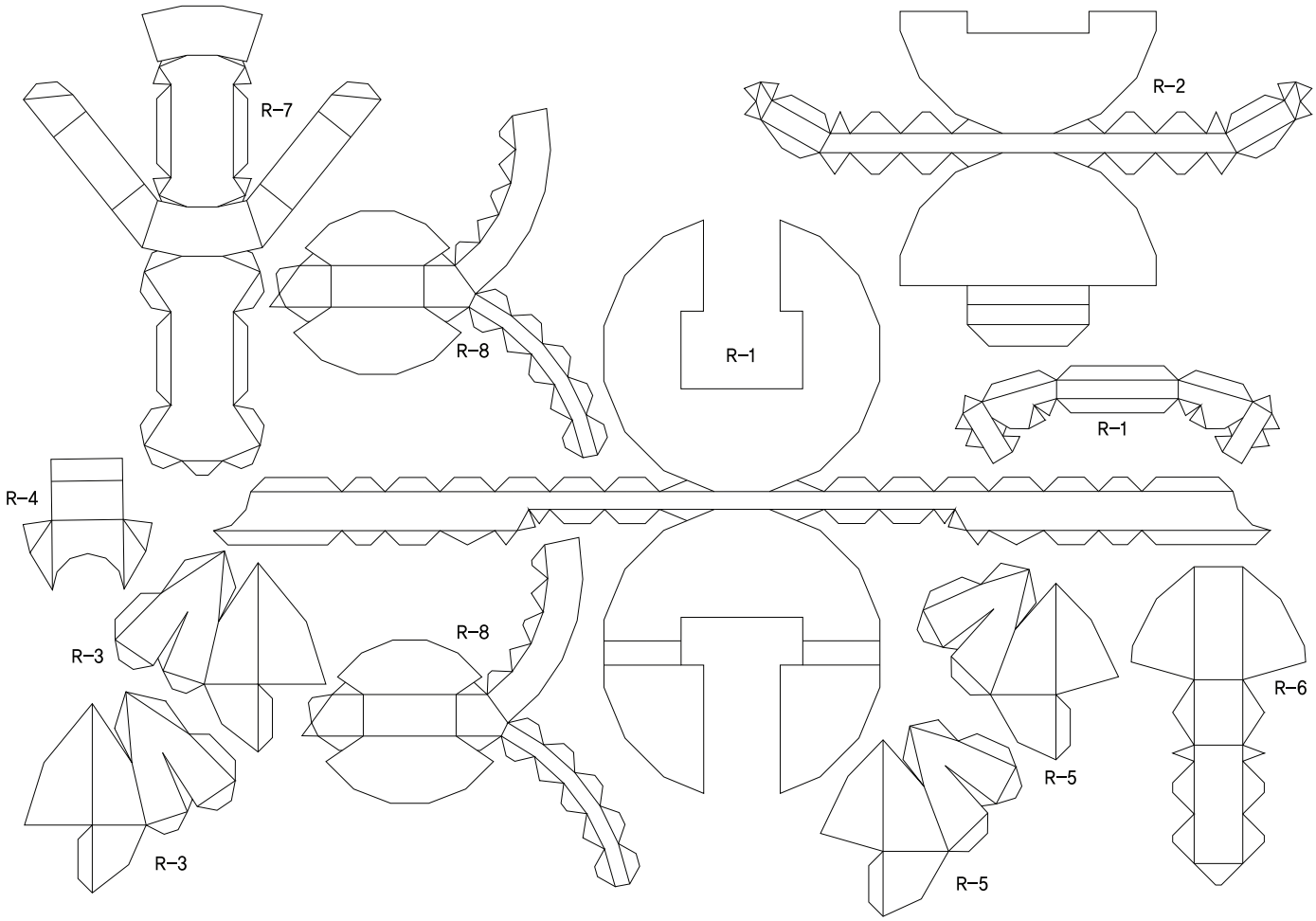

S red

MODELING BY CREAM-BREAD / GEAR FIGHTER DENDOH

INFORMATION			
1–2	HEAD	4–6	ARM
3	CHEST	7	PELVIS

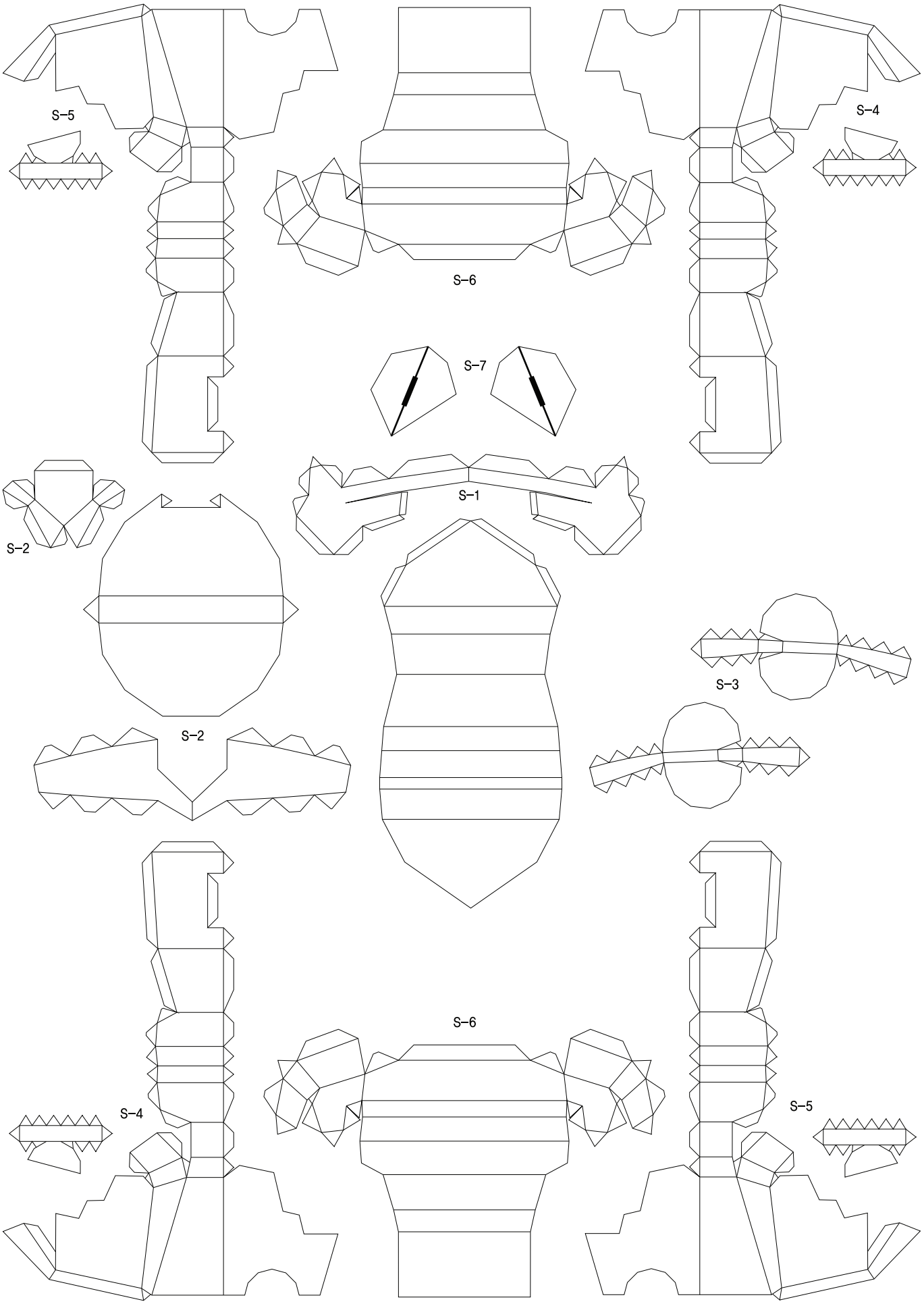

T yellow

MODELING BY CREAM-BREAD / GEAR FIGHTER DENDOH

INFORMATION	
1	HEAD
2–6	CHEST

