

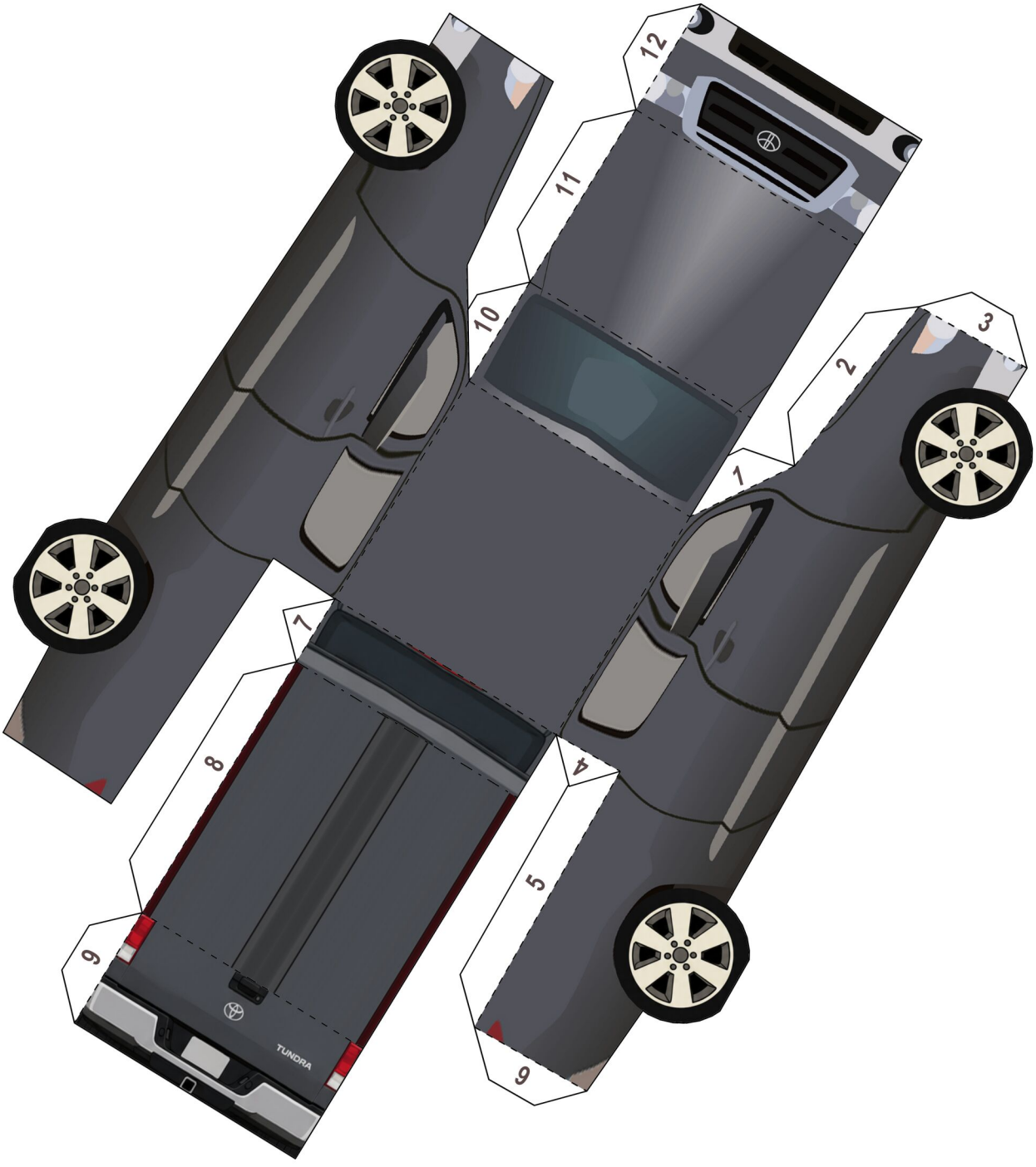

designed by supercoloring.com