MSZ-006 HYPER ZGUNDAM Assembly 5/5 Design by karen

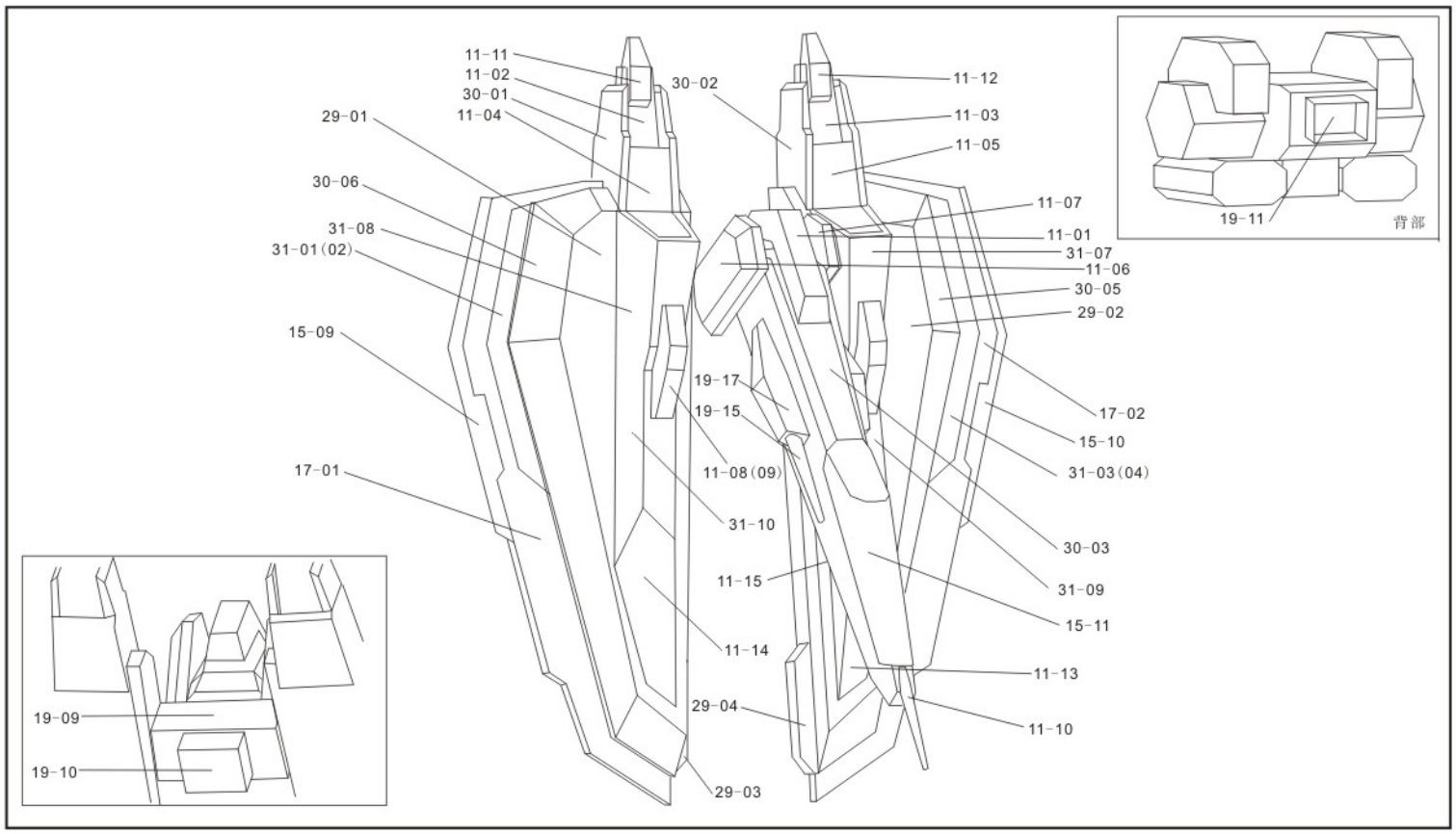

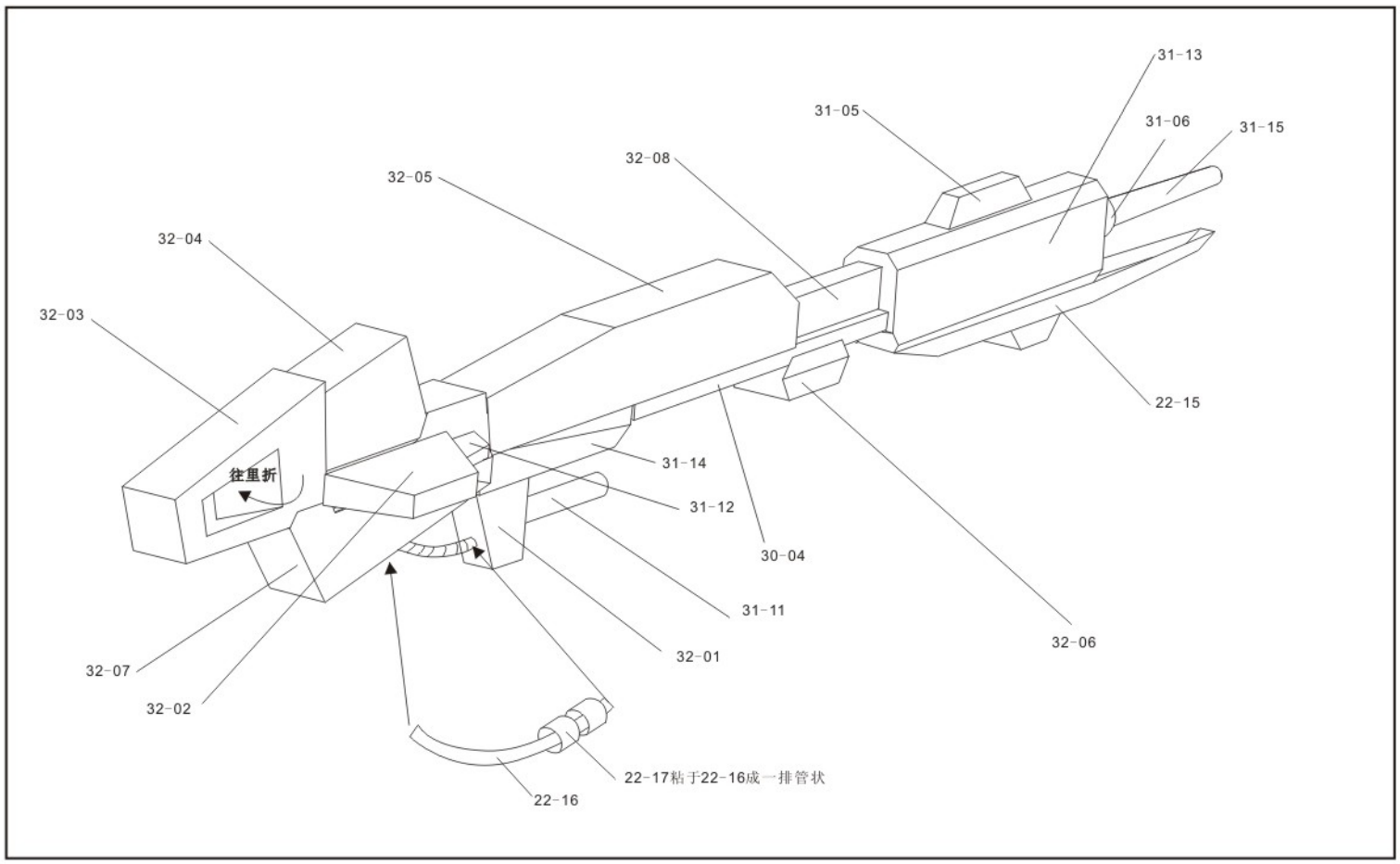

如說明書不夠明白,請見諒,可與本人聯系.

QQ:8695090
EMAIL:KARENBOY@163.COM
BLOG:KARENBOY.BLOG.163.COM

MSZ-006 HYPER ZGUNDAM Assembly 2/5 Design by karen

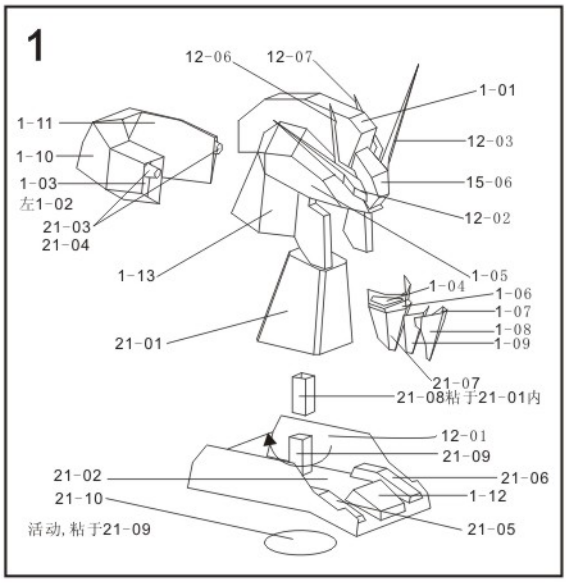

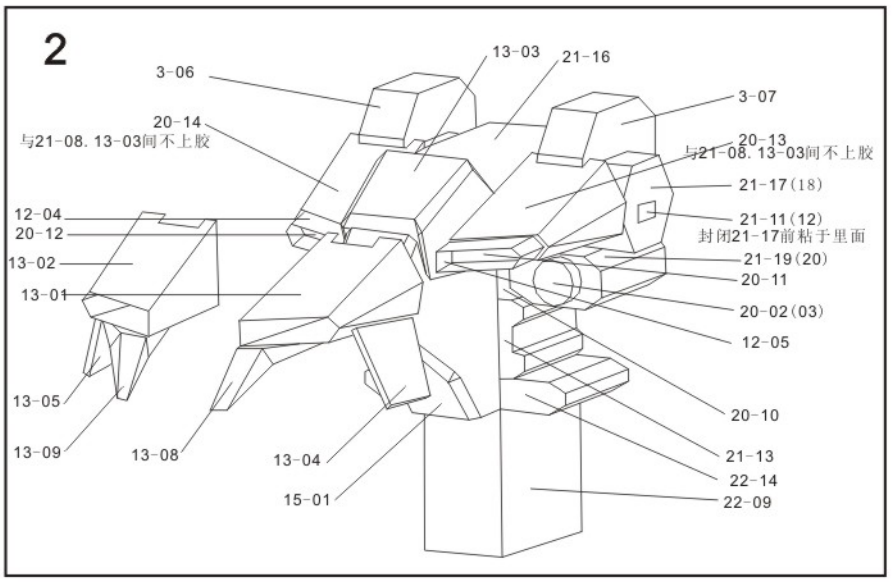

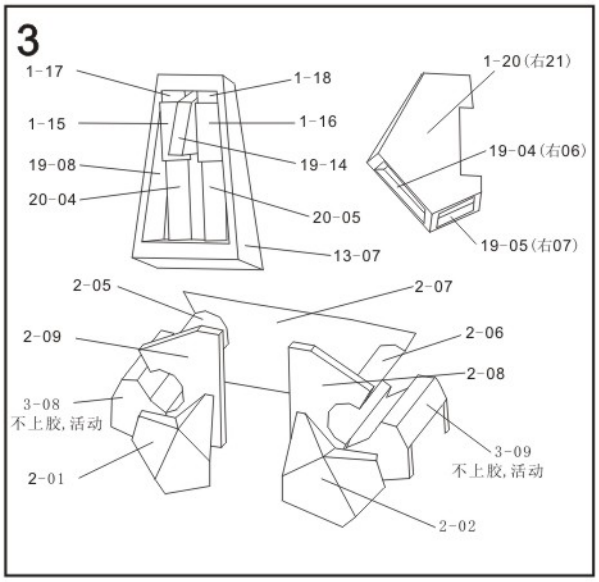

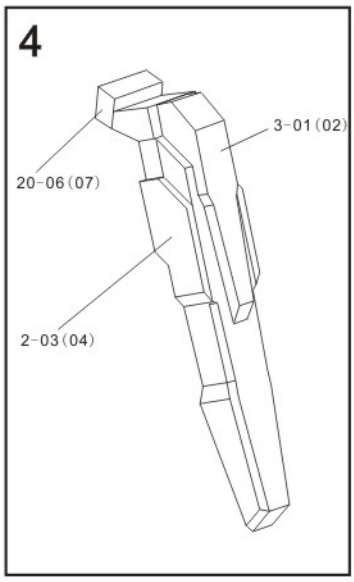

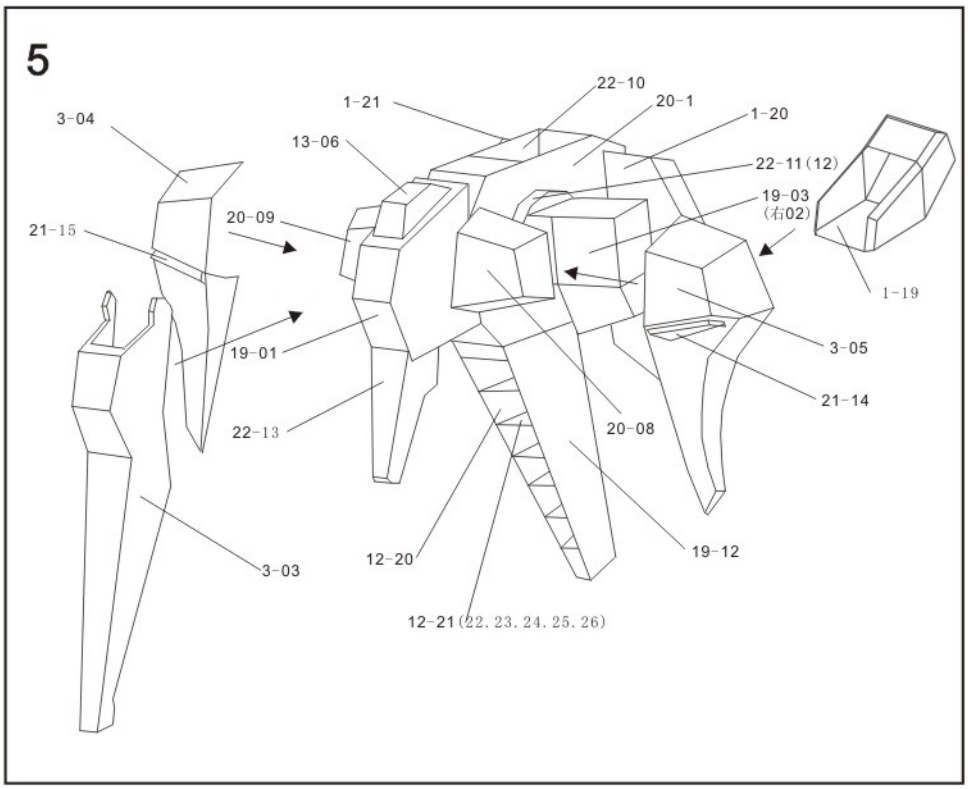

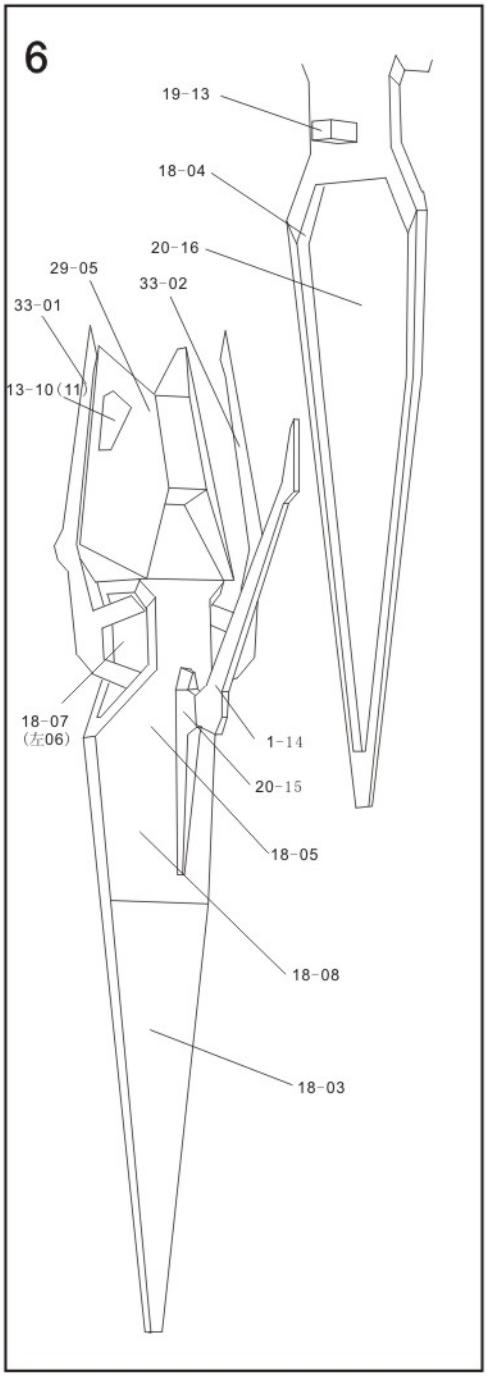

MSZ-006 HYPER ZGUNDAM Assembly 3/5 Design by karen

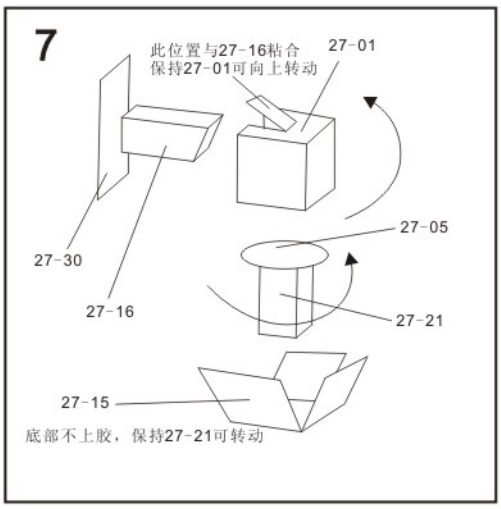

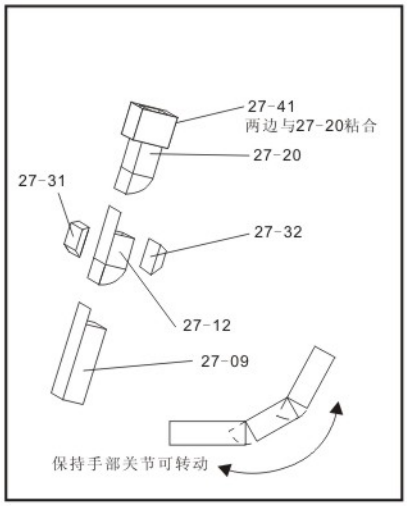

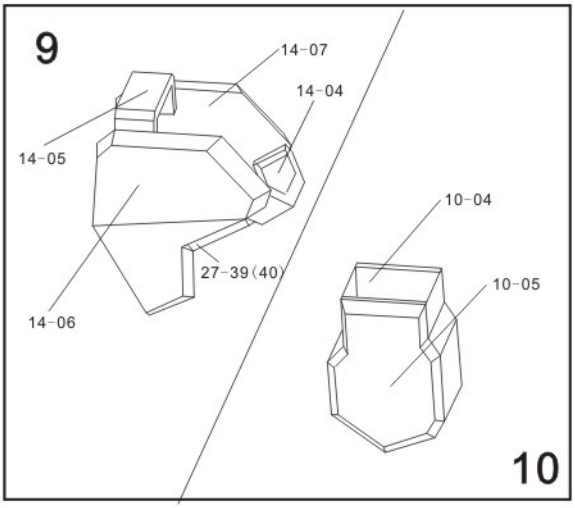

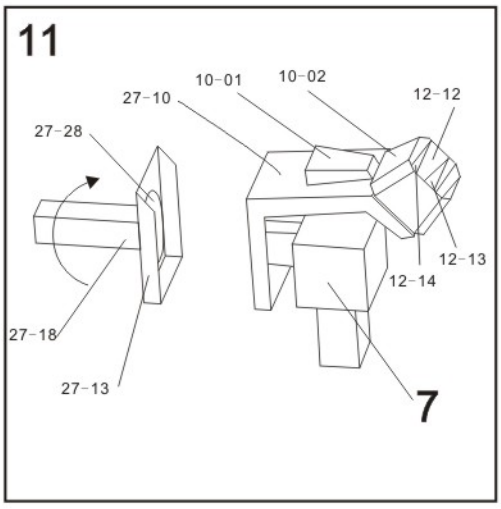

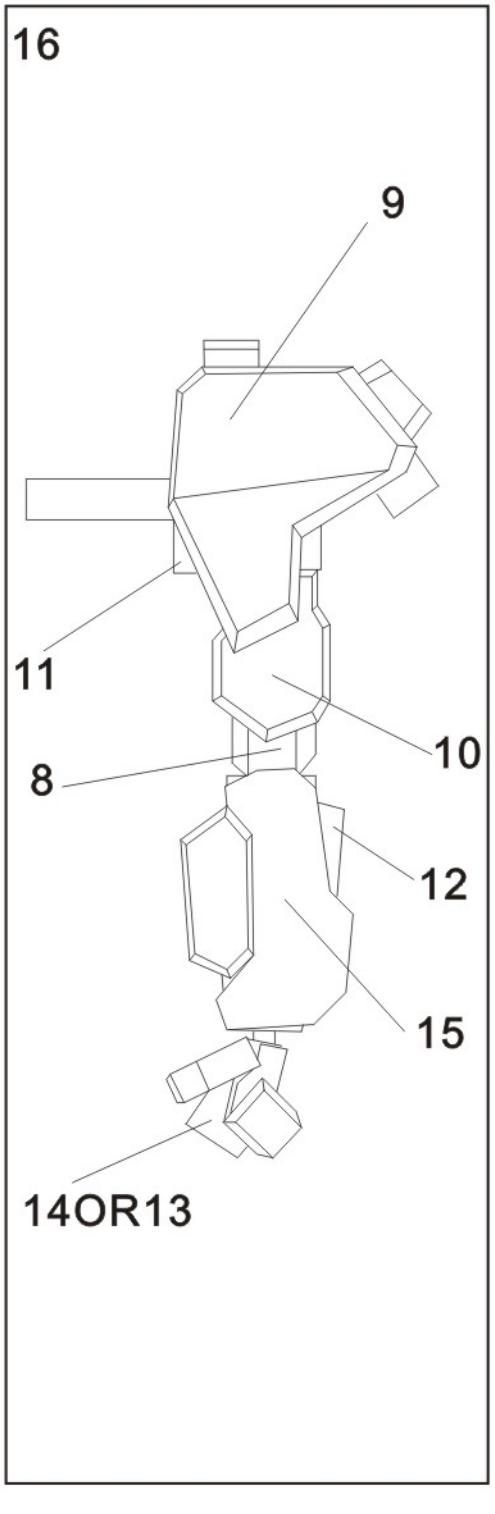

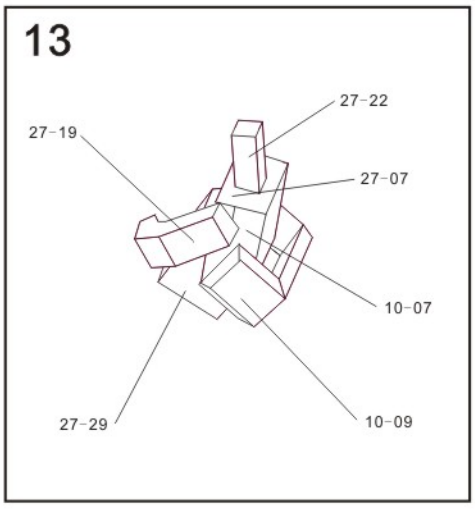

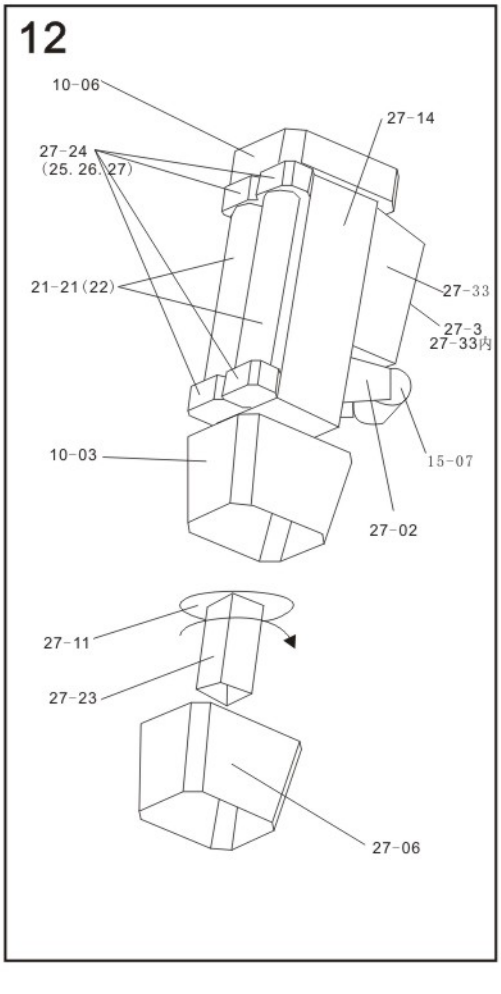

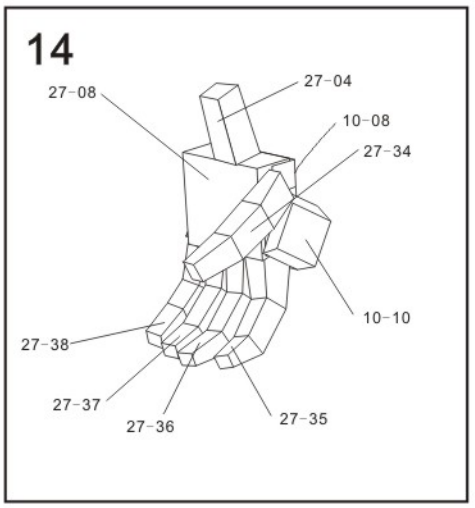

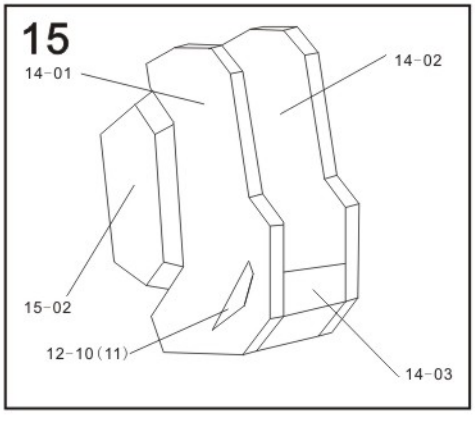

MSZ-006 HYPER ZGUNDAM Assembly 4/5 Design by karen

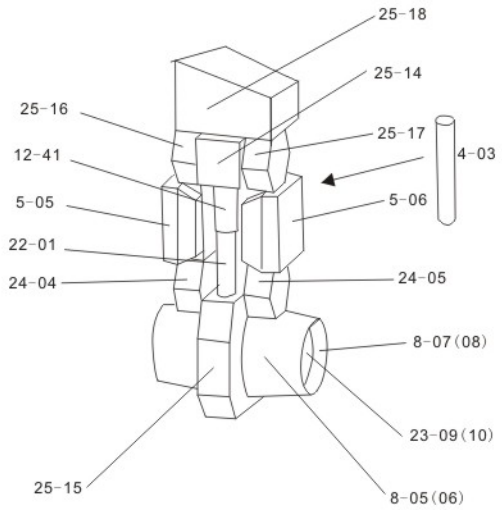

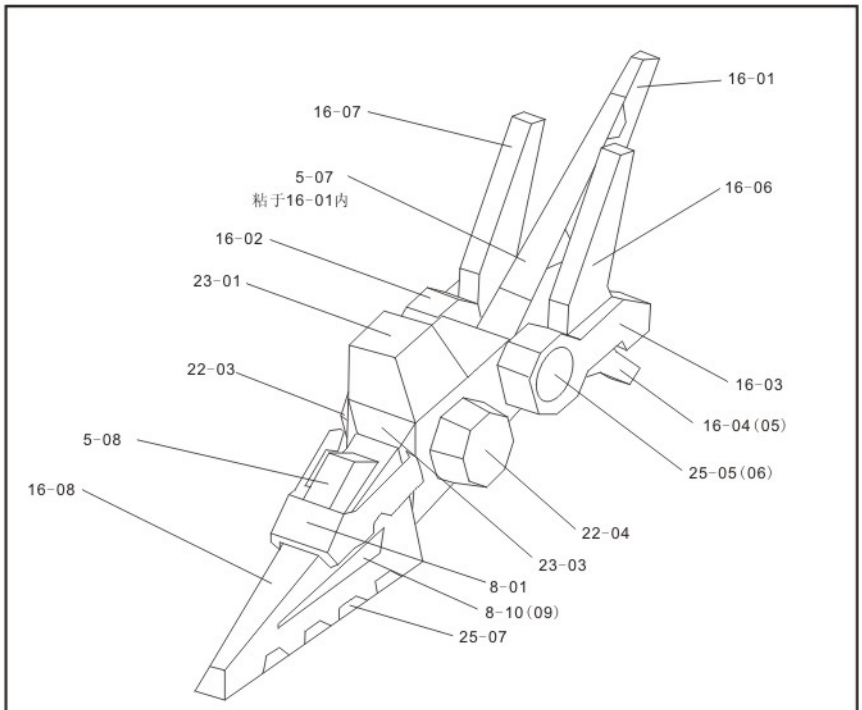

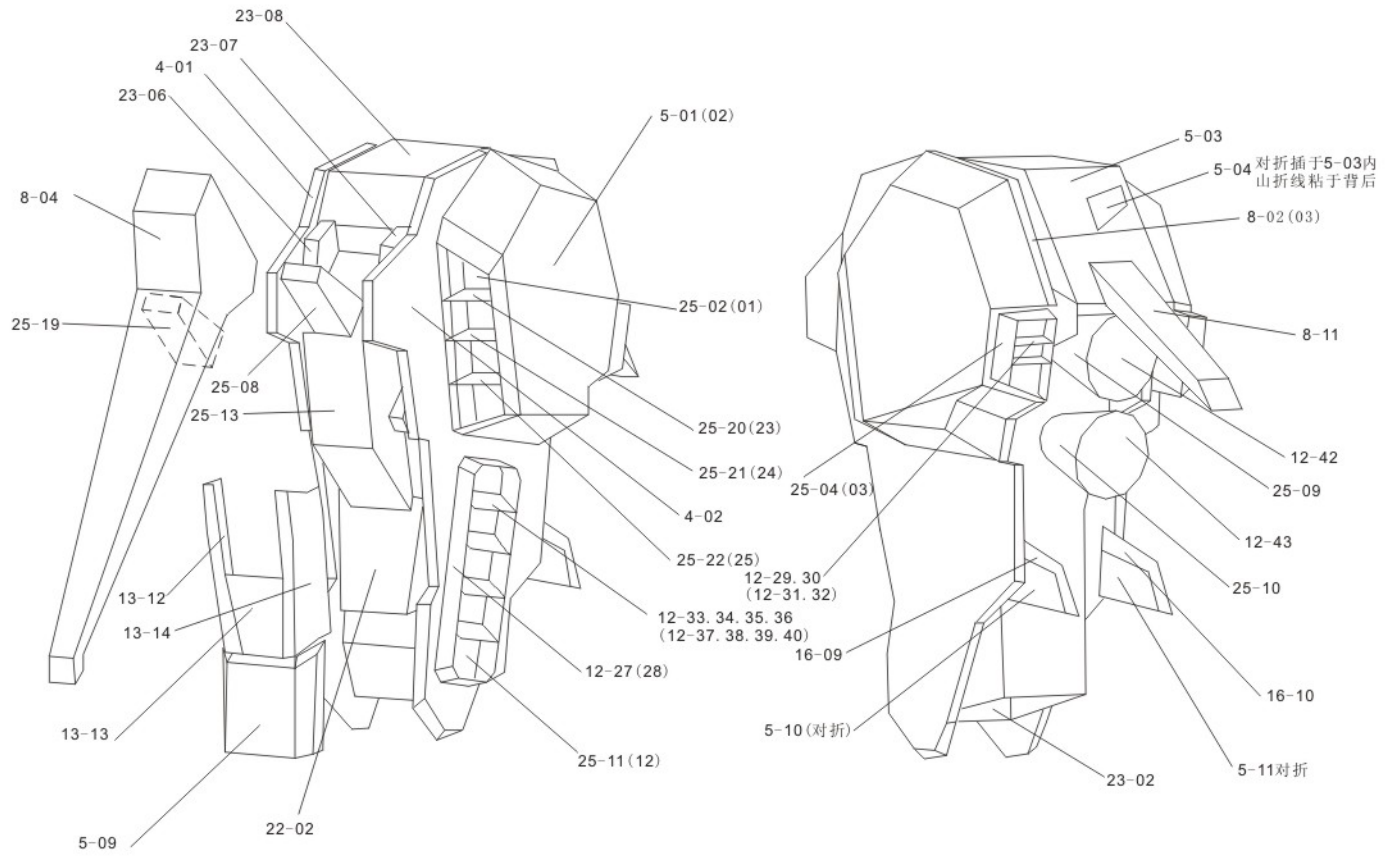

MSZ-006 HYPER ZZ GUNDAM Assembly 1/5 Design by karen

