ZBP PAPERCRAFTER



1:100 PAPERCRAFT

The CN-235-100 aircraft is twin turboprop powered and pressurized. It has high cantilever wings and retractable landing gears. Its great versatility includes the capability for quick conversion into numerous configurations, remarkably enhanced by virtue of a rear loading ramp and door. The aircraft is certified under FAR Part 25 and Part 36. The CN-235 Maritime Patrol Aircraft (MPA) is an optimum combination of an advanced multi purpose platform, featuring: medium range capability, larga cabin space, state of the art, sophisticated and fully integrated mission avionics systems. This advanced MPA platform offers an efficient, cost effective means of detecting, locating,

Country of Origin	Indonesia			
Builder	PT. Industri Pesawat Terbang Nusantara (IPTN)			
Role				
Similar Aircraft				
Wing Span				
Length				
Height				
Weight				
Engine	General Electric CT7-9C			
1,750 SHP at normal take-off power				
1,850 SHP Max. take-off power (APR on)				
Propeller	4 blades Advanced Hamilton Standard 14 RF-21			
Take-off distance to 50 ft. screen altitude				
ECS and engine anti ice "off"				
T.O. flaps, landing gear "down"				
All engines operatives	3,471 ft.	1,058 m.		
Max. rate of climb				
All engine operatives				
One engine operatives				
19.49 ft/sec.				
5.085 ft./sec.				
5,94 m/sec.				
1.55 m/sec.				
Max. cruise speed	207 KTAS	383.364 km/h.		
Long range speed	189 KTAS	350.082 km/h.		
Patrol speed at patrol altitude and medium weight			170 KTAS	314.840 km/h.
Take-off distance	6.496 ft.	1.980 m		
Landing distance from 50ft. screen				
Altitude, flaps and landing gear "down"				
Max. landing weight, with reserve thrust	3,592 ft.	1095 m		
Landing without reserve thrust	4,035 ft.	1,230 m		
Endurance	8 hours			
Range	1,000 NM.			
Max. ramp weight	16,200 kg.			
Max. take-off weight	16,000 kg.			
Max. landing weight	15,800 kg.			
Max. zero fuel weight	14,500 kg.			
Max. useful load	4,000 kg.			
Max. fuel capacity	4,200 kg.			

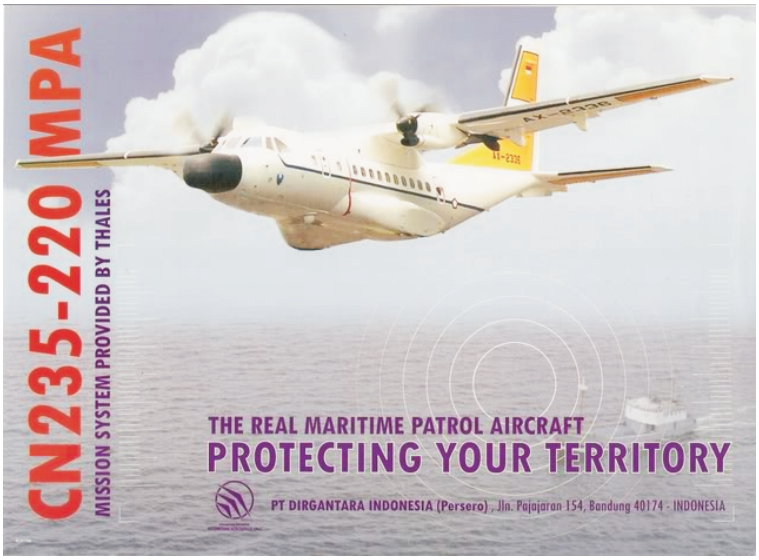

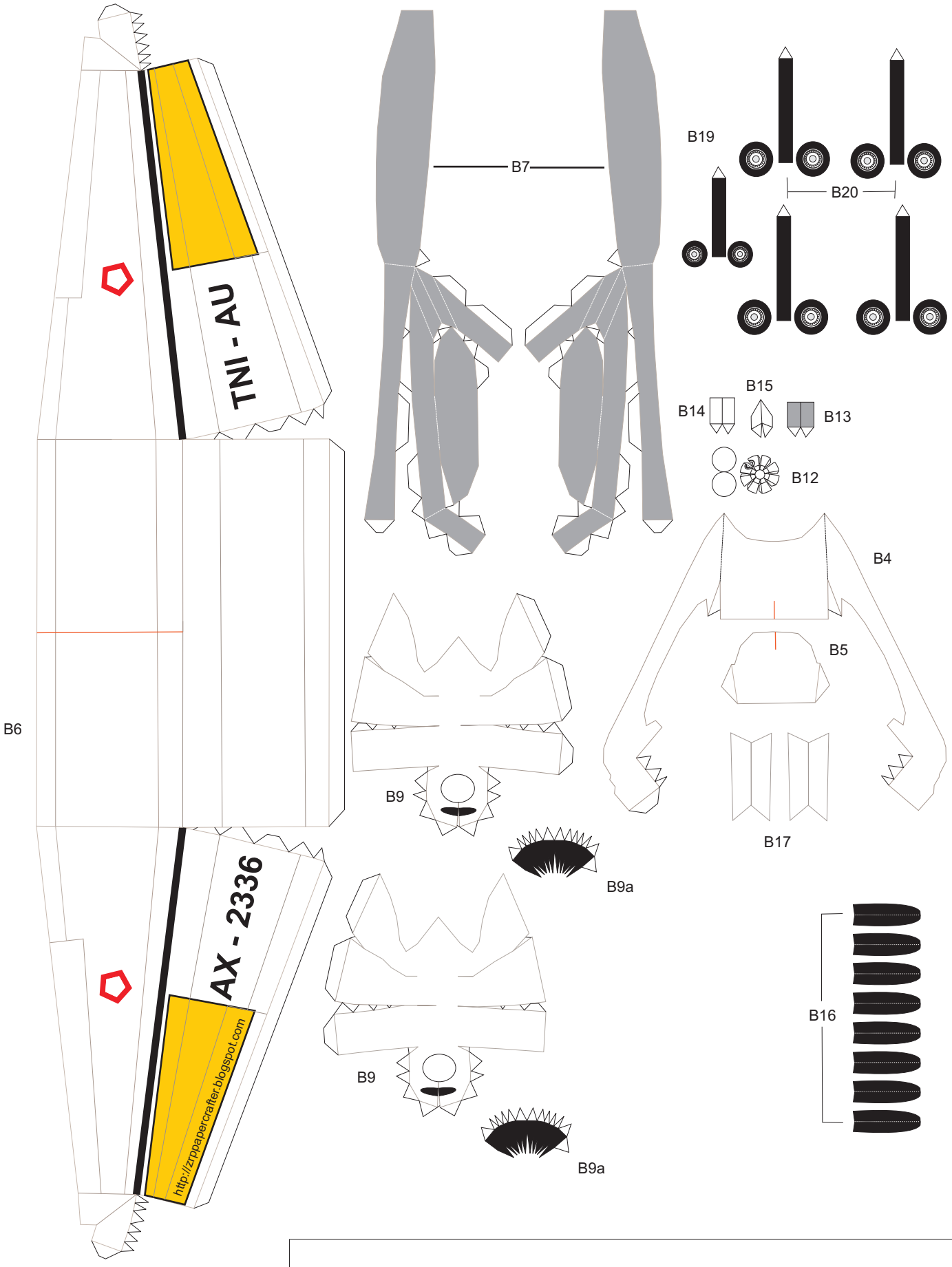
TNI - AU
AX - 2336
http://zrppapercrafter.blogspot.com
B6
B7
B19
B20
B15
B14
B13
B12
B4
B5
B17
B9
B9a
B9
B9a
B16

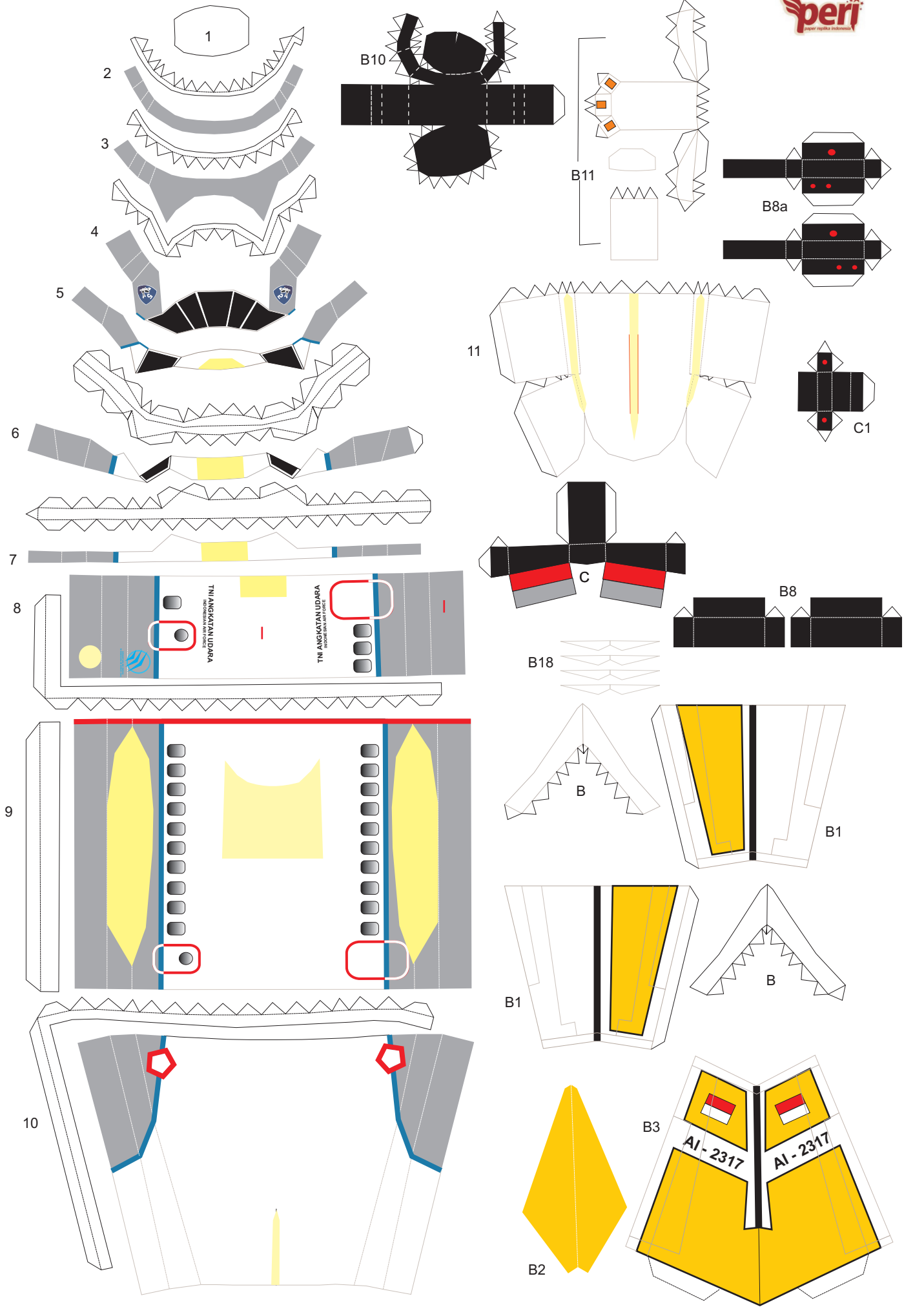
1
2
3
4
5
6
7
8
9
10
B10
B11
B8a
11
C1
C
B8
B18
B
B1
B1
B
B3
AI - 2317
AI - 2317
B2
TNI ANGKATAN UDARA
INDONESIAN AIR FORCE

INSTRUCTIONS

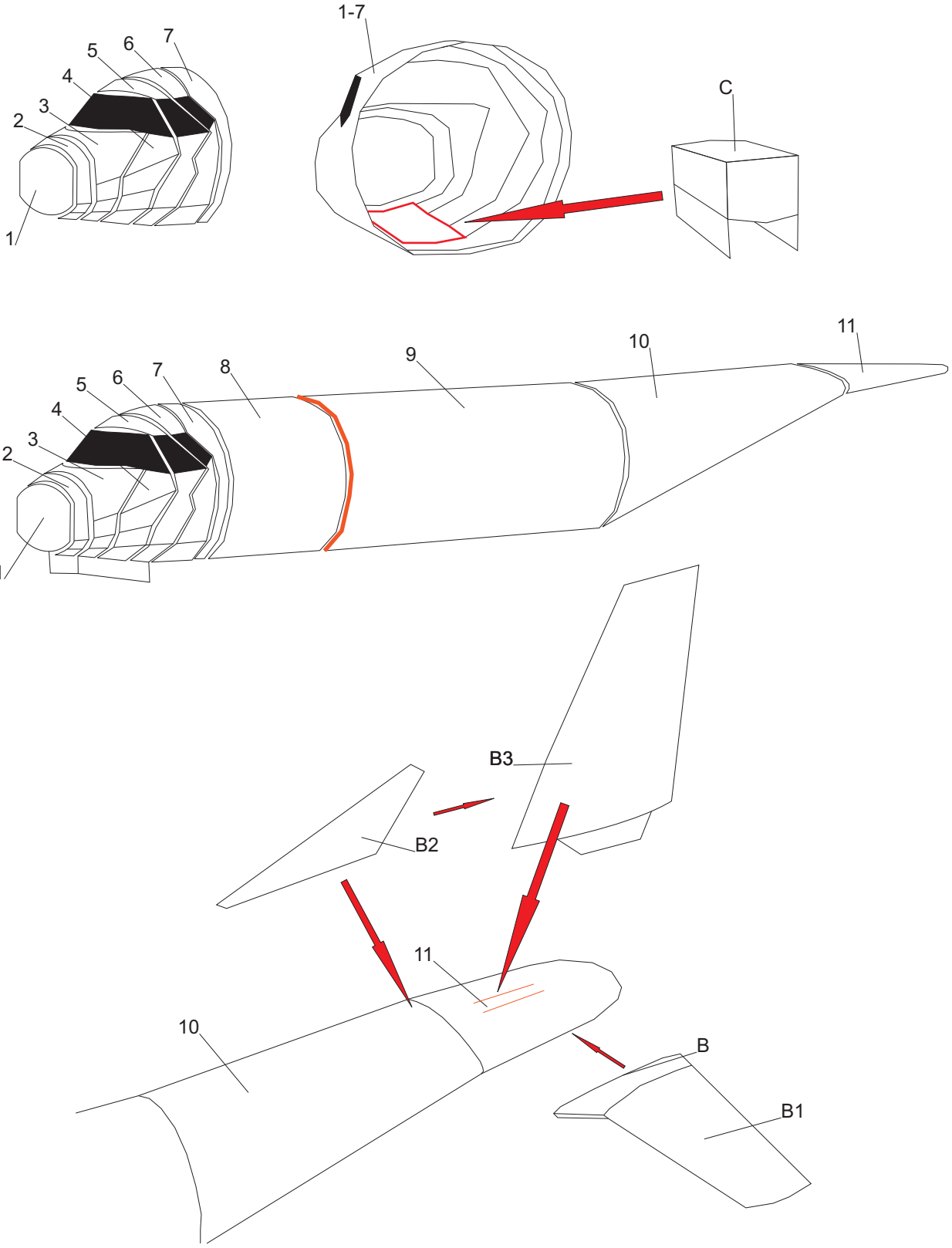

INSTRUCTIONS

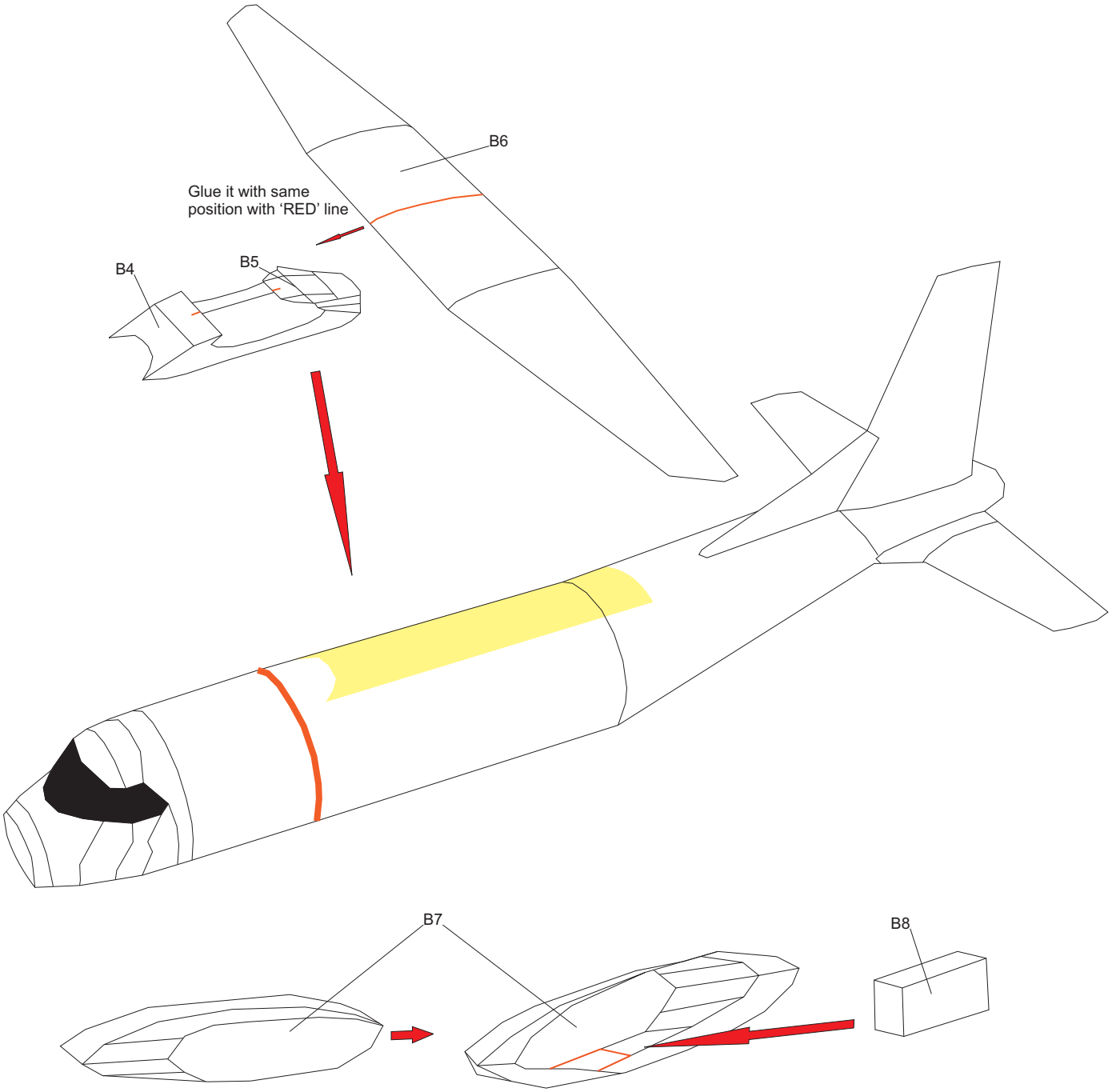

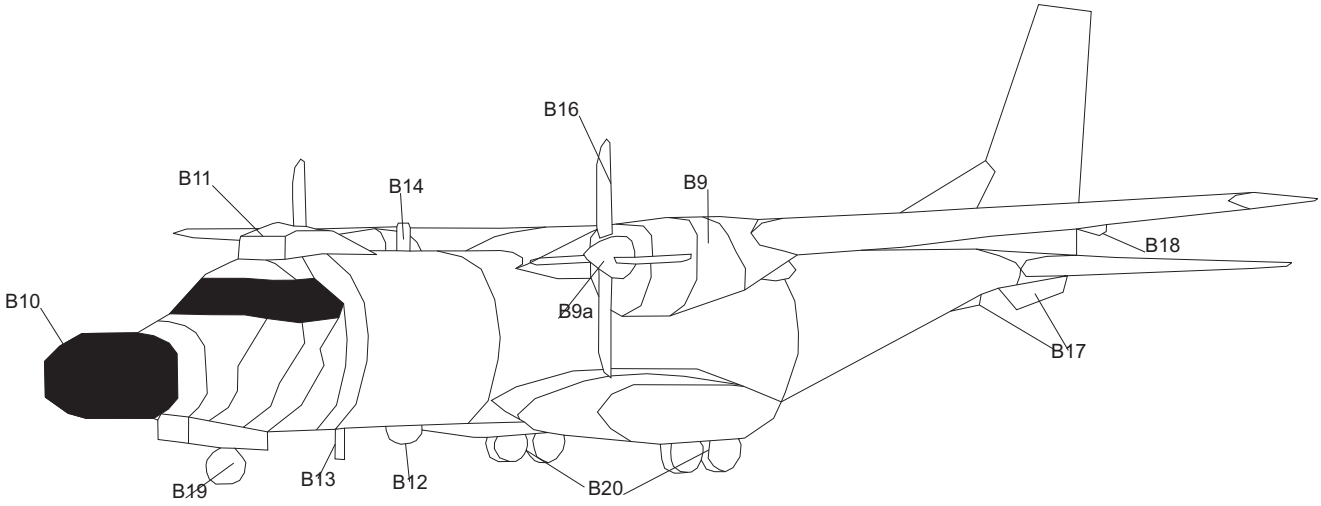

ZBP Papercrafter

Have a Nice Build

and Make your own Paper Airplane