BAE HAWK TI MK53
INDONESIAN AIRFORCE LIVERY
1:42 SCALE



Bae Hawk mk.53

Hawk fighter mk.53 an advanced training aircraft that can act as a Ground Attack . In Indonesia
in the 15th Squadron air base Iswahyudi, Madiun. Formed into aerobatics team with the name of Jupiter Team.

source : http://awando.wordpress.com/wallpaperpesawat-tempur-tni-au/hawk-mk-53/

I Create this model for the event
will be held in Bandung Indonesia
That's Bandung Air Show 2012
event.

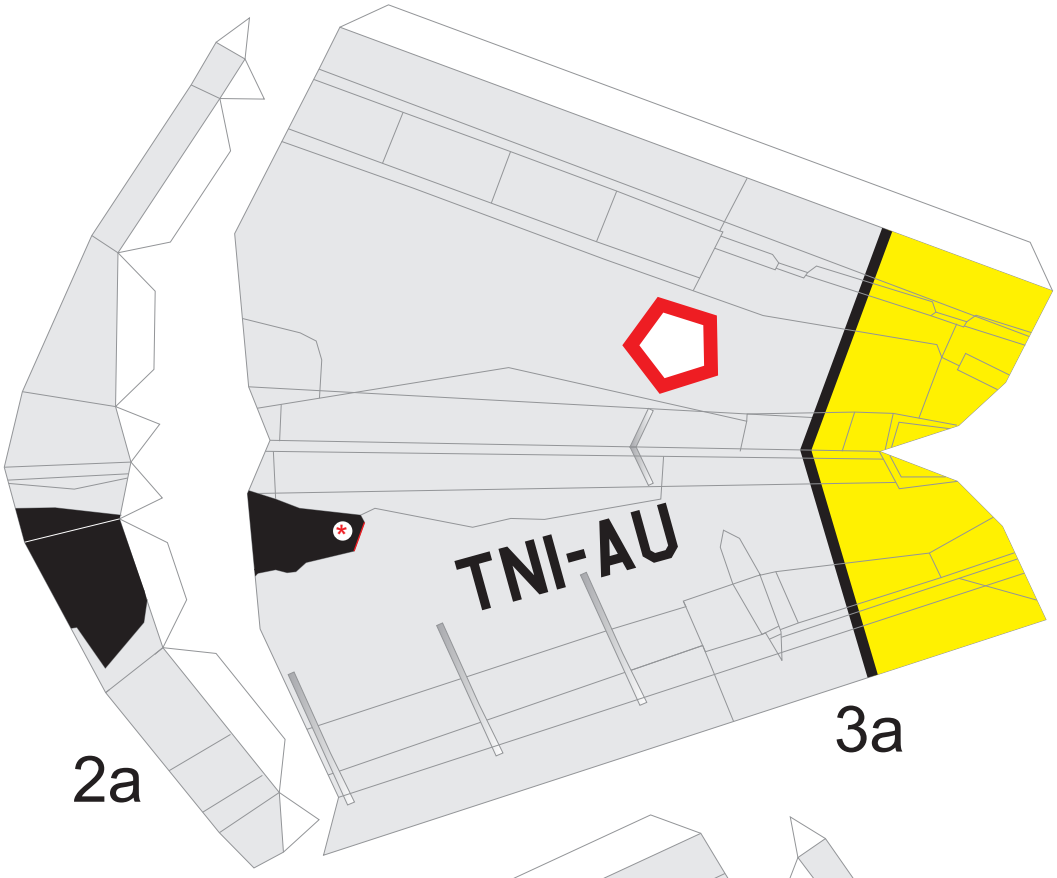

2a

3a

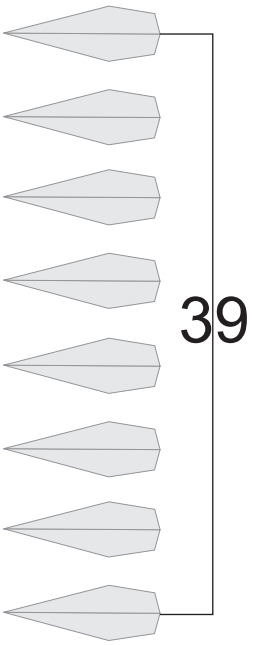

39



18

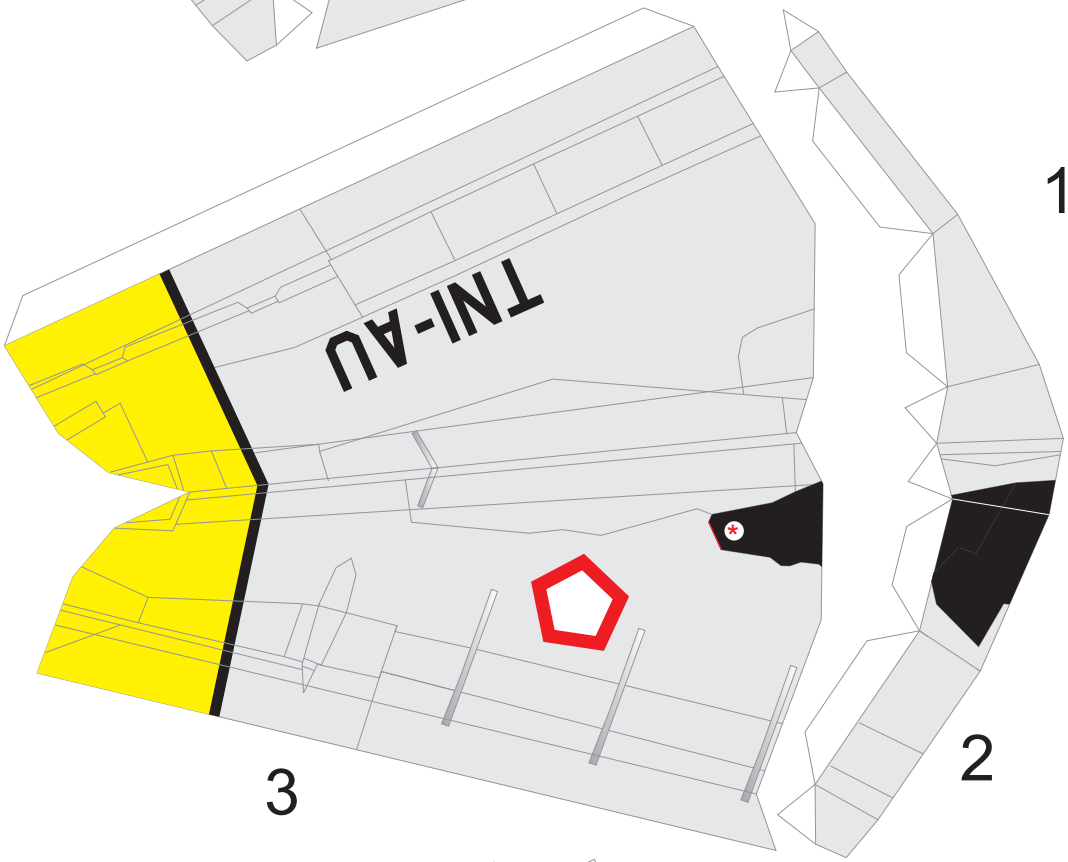

3

2

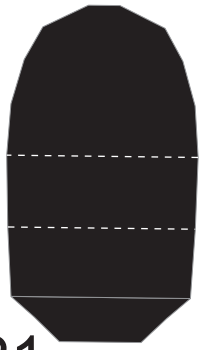

21

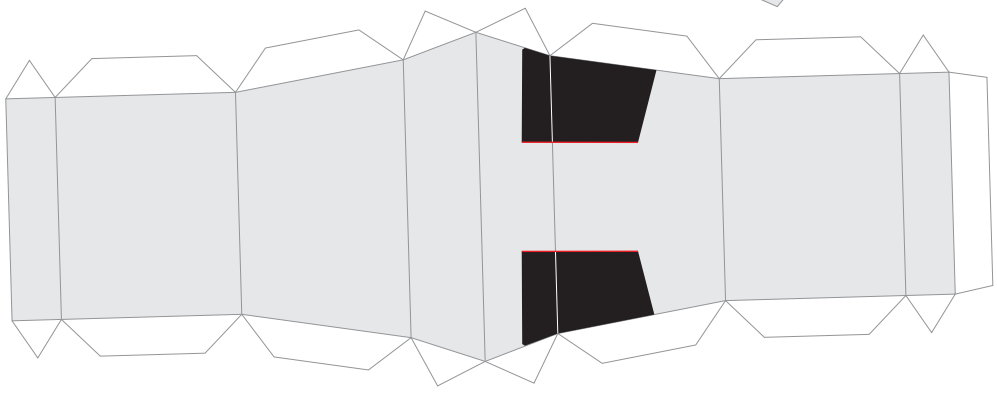

1



25

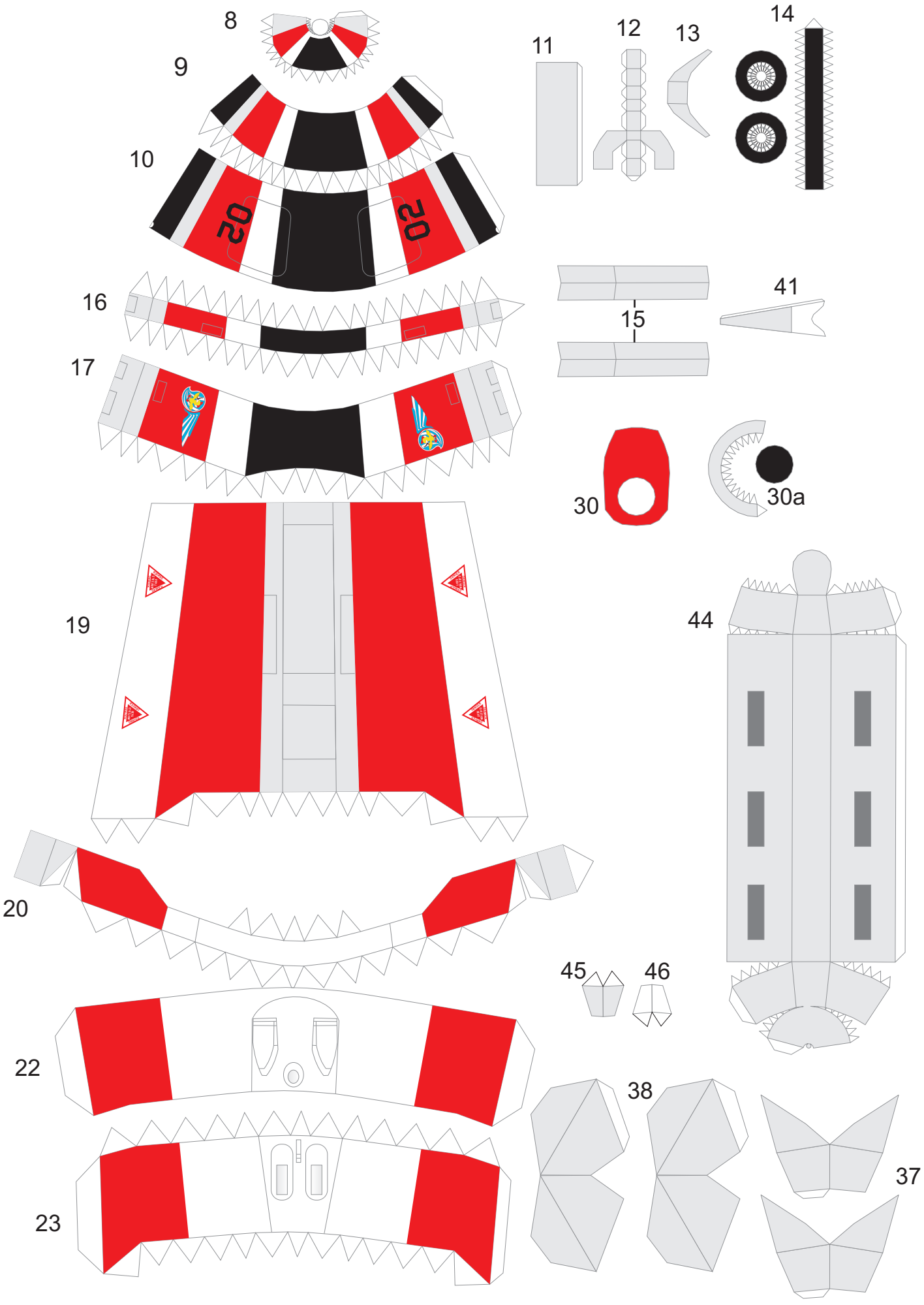
8
9
10
20
20
11
12
13
14
16
15
41
17
30
30a
19
44
20
45
46
22
38
37
23

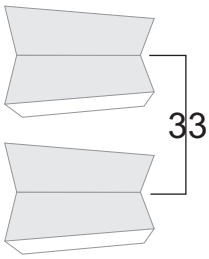

33

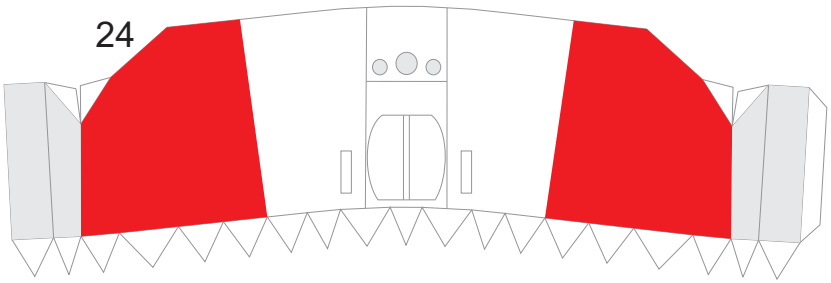

24

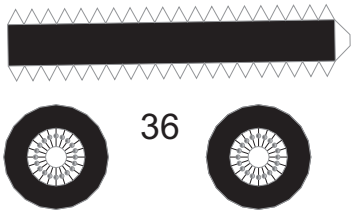

36

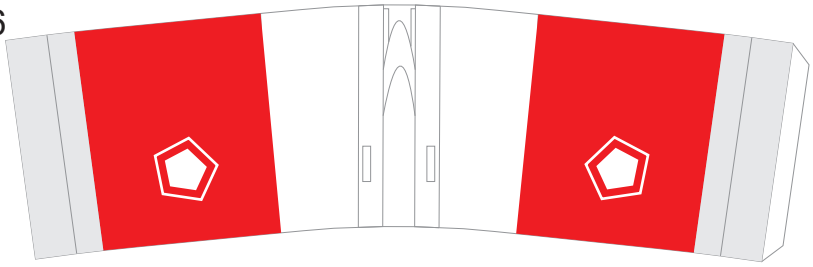

26

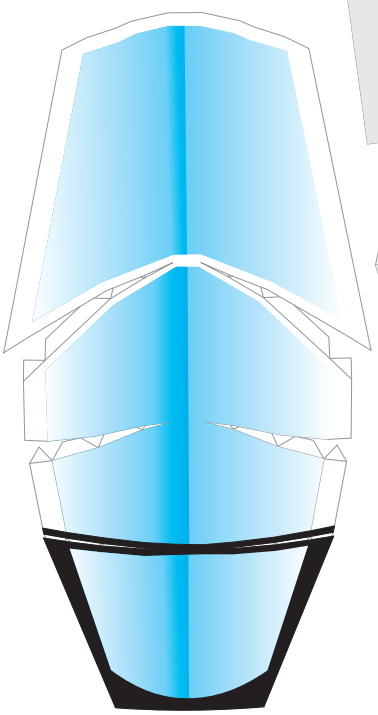

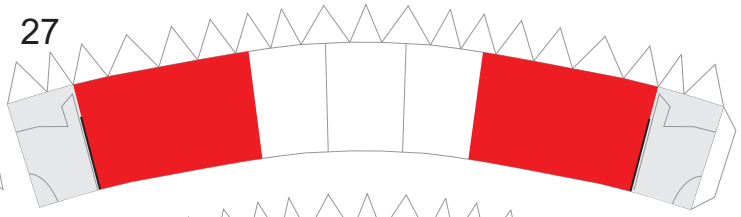

27

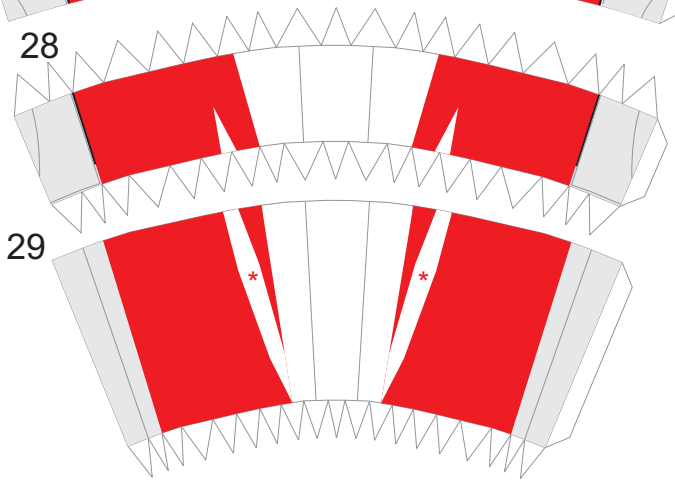

28

29



USE ACLYRIC
SHEET FOR THIS PART

40

40

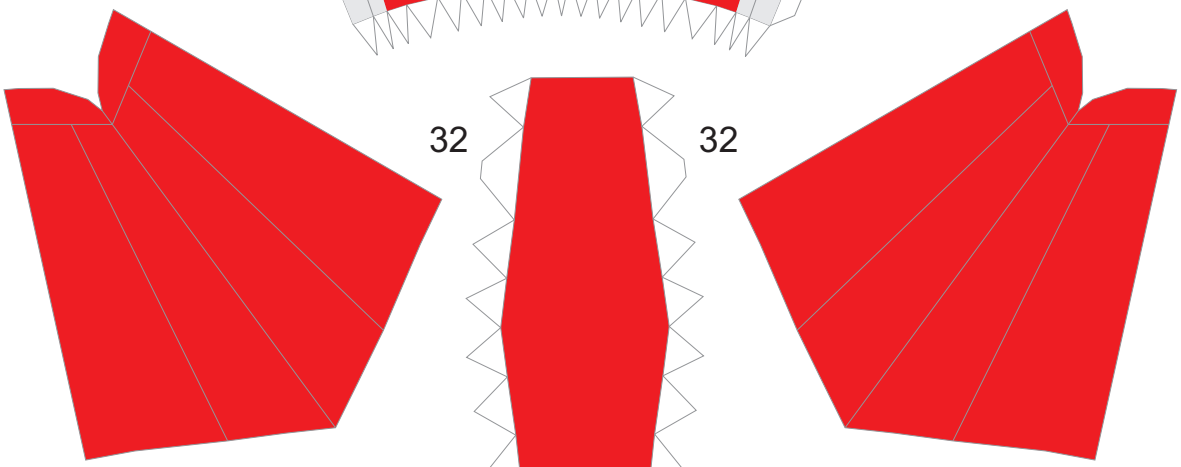

32

32

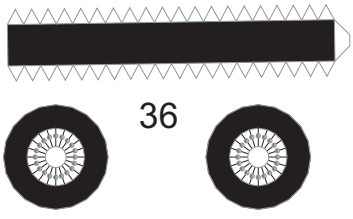

36

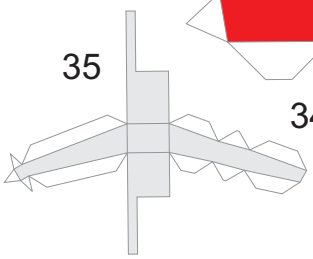

35

34

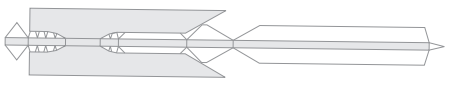

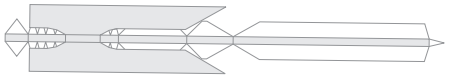

42

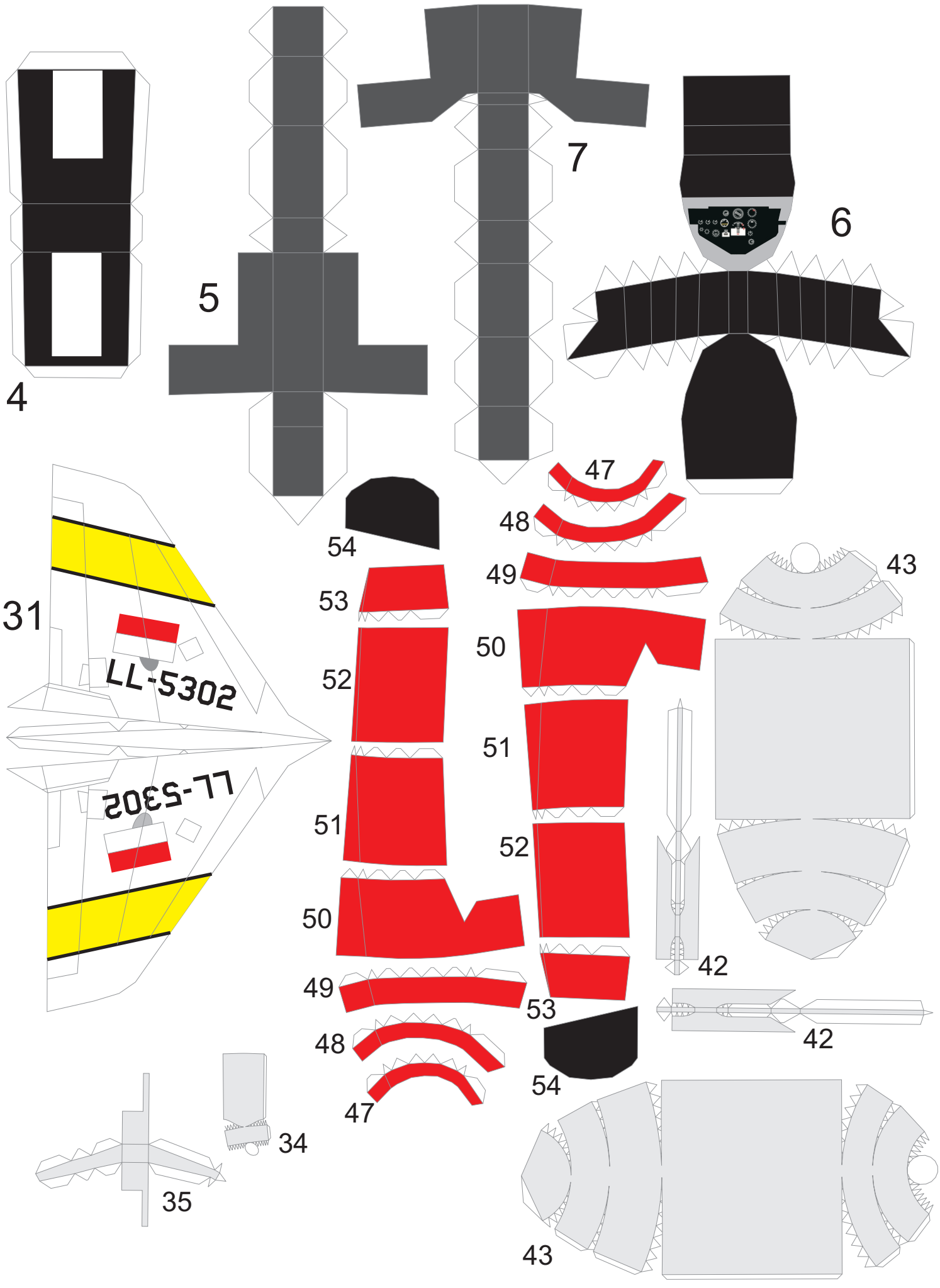
4
5
7
6
31
LL-5302
LL-5302
54
53
52
51
50
49
48
47
47
48
49
50
51
52
53
54
43
42
42
43
34
35

INSTRUCTIONS

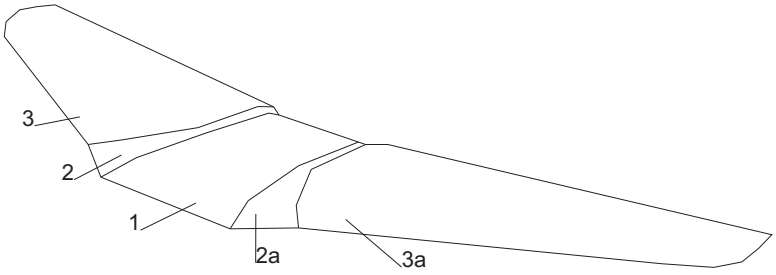

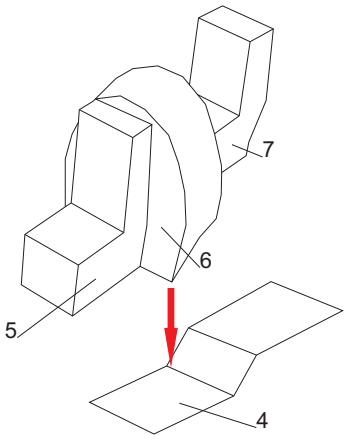

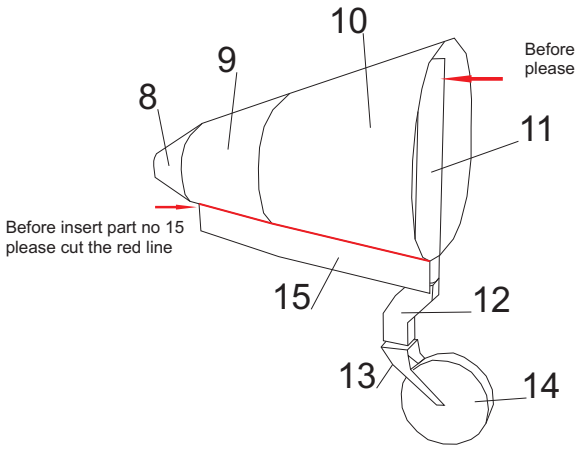

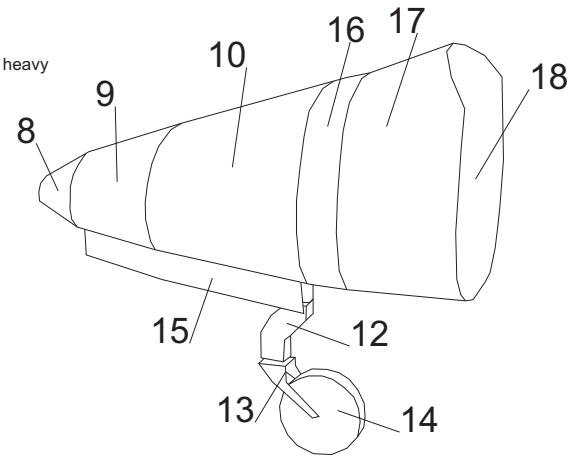

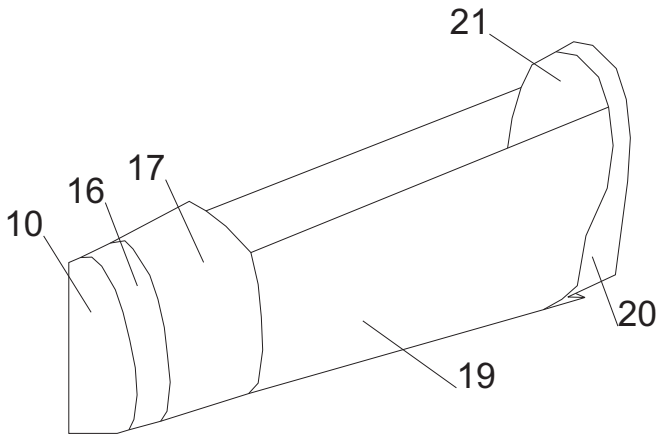

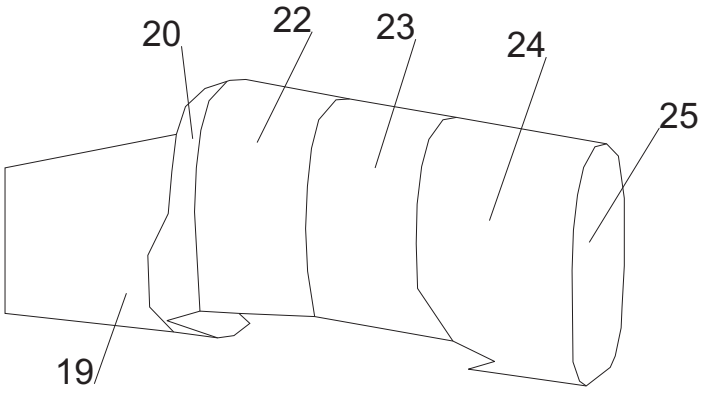

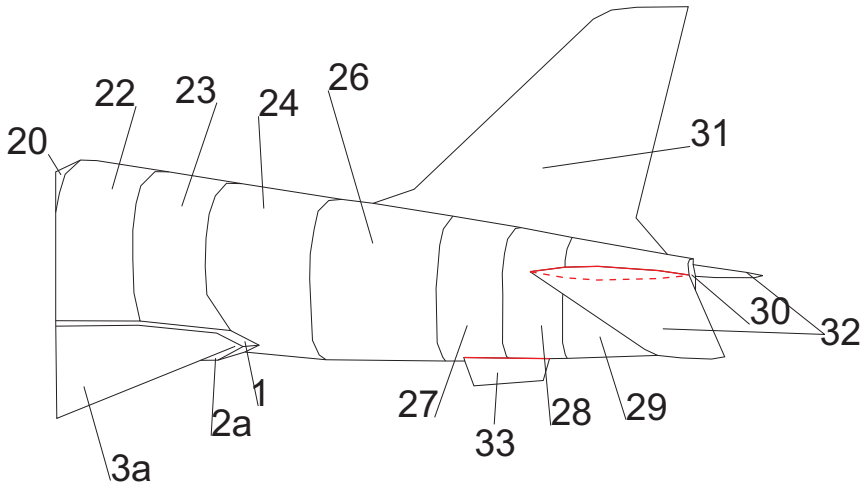
20
22
23
24
26
31
30
32
1
2a
3a
27
33
28
29

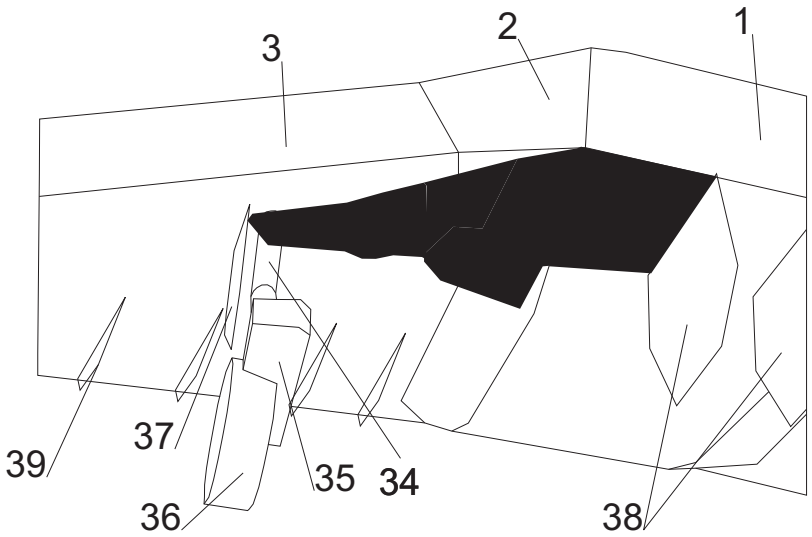
3
2
1
39
37
36
35
34
38

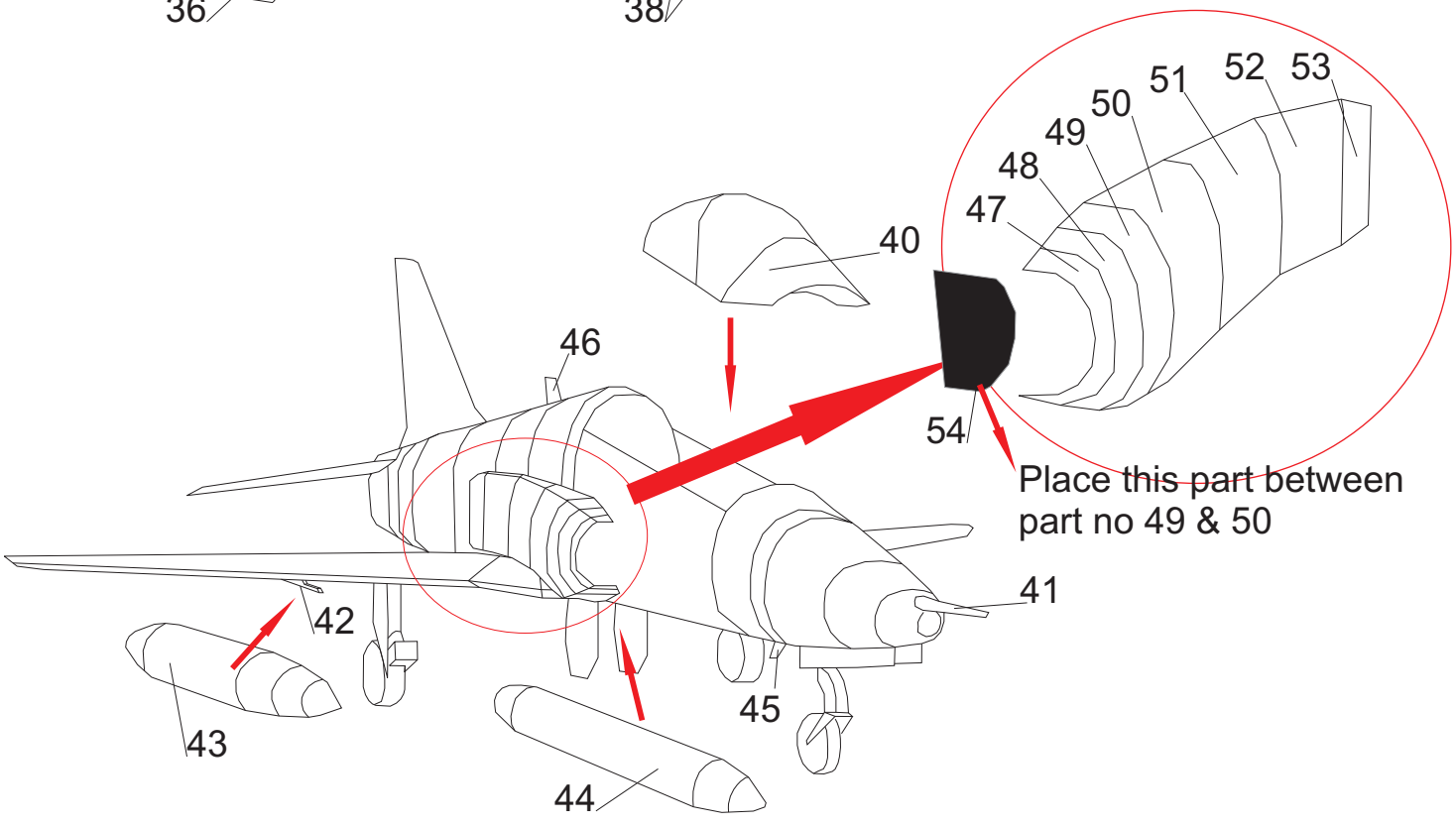
52
53
51
50
49
48
47
40
46
54
Place this part between
part no 49 & 50
41
42
43
45
44