3. 腰组合

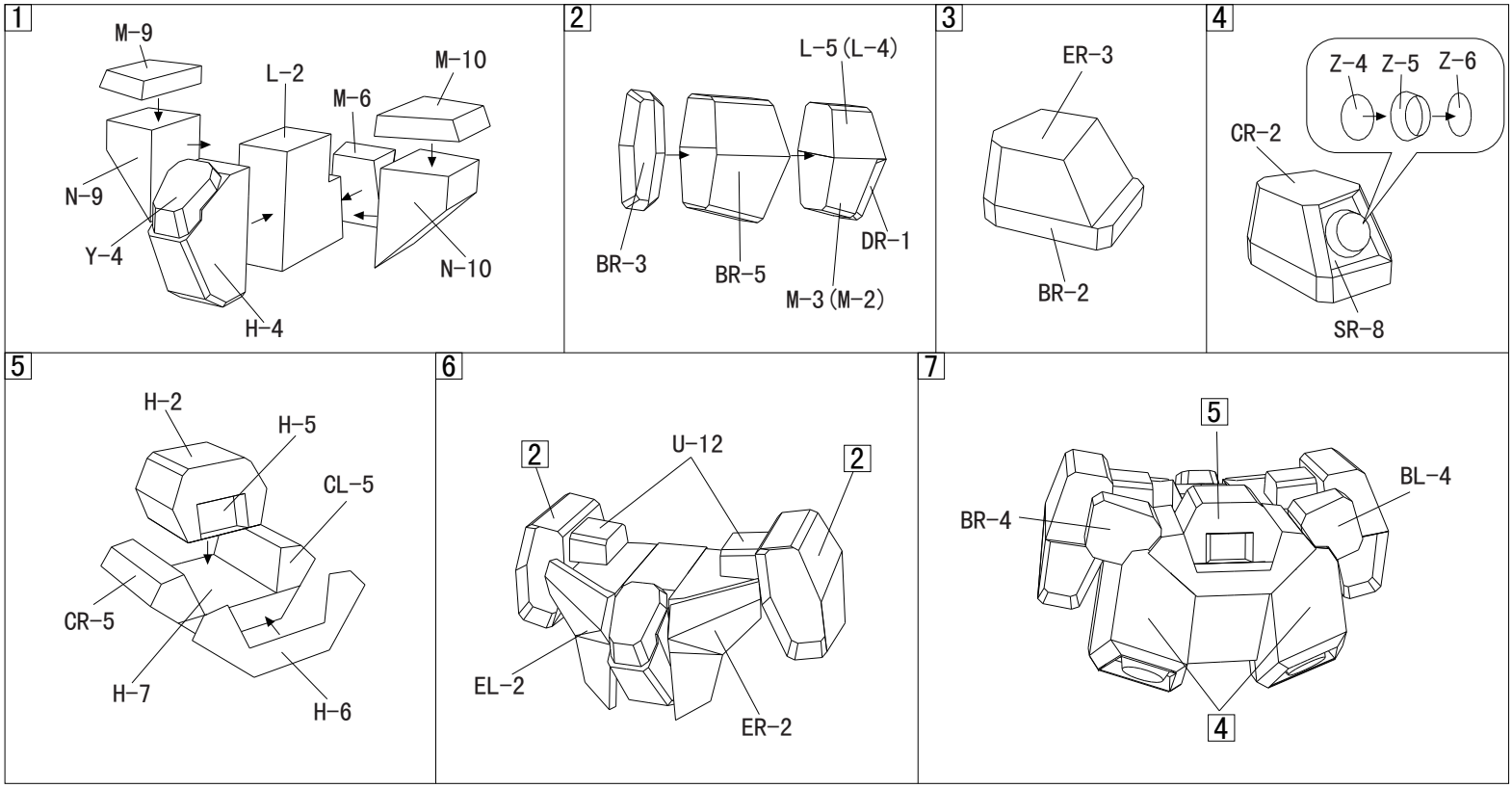
1
M-9
L-2
M-10
M-6
N-9
Y-4
N-10
H-4
2
L-5(L-4)
BR-3
BR-5
DR-1
M-3(M-2)
3
ER-3
BR-2
4
Z-4 Z-5 Z-6
CR-2
SR-8
5
H-2
H-5
CL-5
CR-5
H-7
H-6
6
2
U-12
2
EL-2
ER-2
7
5
BL-4
BR-4
4

4. 腿组合

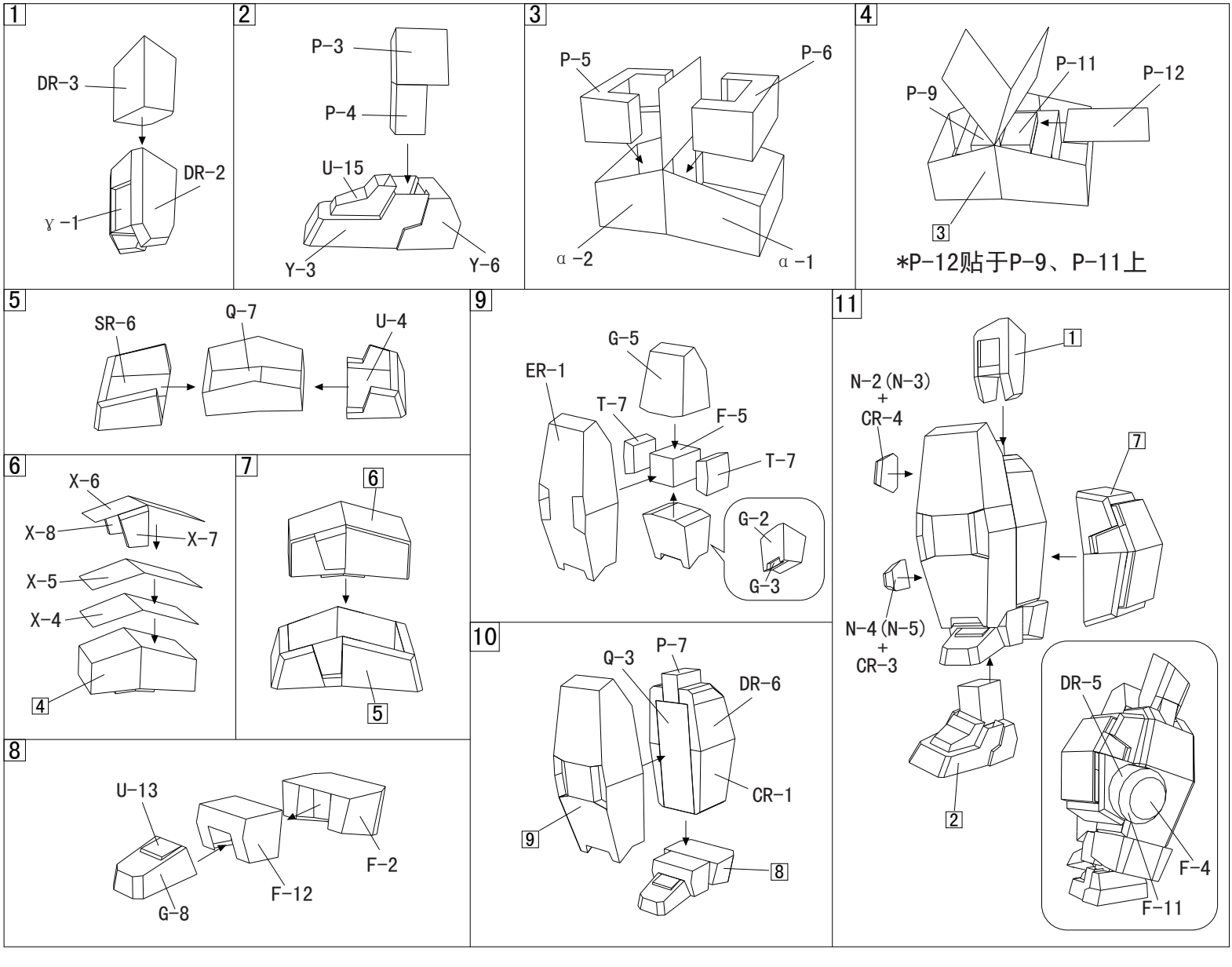
1
DR-3
DR-2
Y-1
2
P-3
P-4
U-15
Y-3
Y-6
3
P-5
P-6
α-2
α-1
4
P-11
P-12
P-9
3
*P-12贴于P-9、P-11上
5
SR-6
Q-7
U-4
6
X-6
X-8
X-7
X-5
X-4
4
7
6
5
8
U-13
F-2
F-12
G-8
9
G-5
ER-1
T-7
F-5
T-7
G-2
G-3
10
Q-3
P-7
DR-6
CR-1
9
8
11
1
N-2(N-3)
+
CR-4
7
N-4(N-5)
+
CR-3
2
DR-5
F-4
F-11