INSTRUCTIONS EC 120 B Colibri

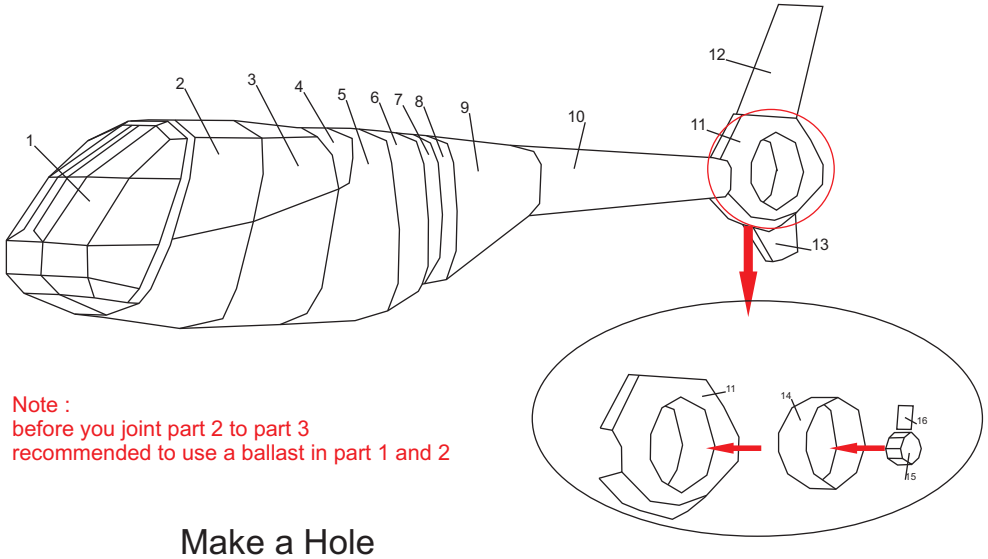

Note :
before you joint part 2 to part 3
recommended to use a ballast in part 1 and 2

Make a Hole

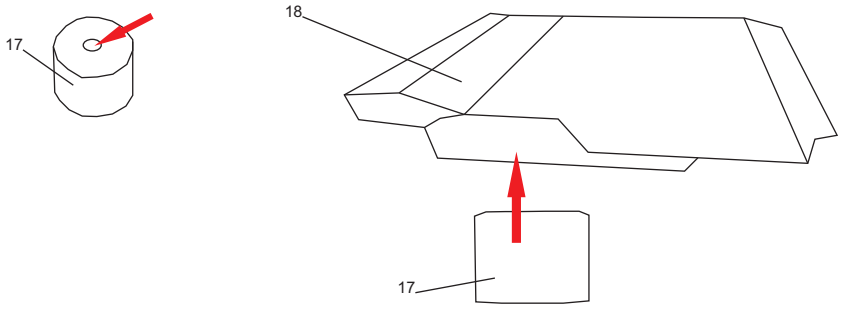

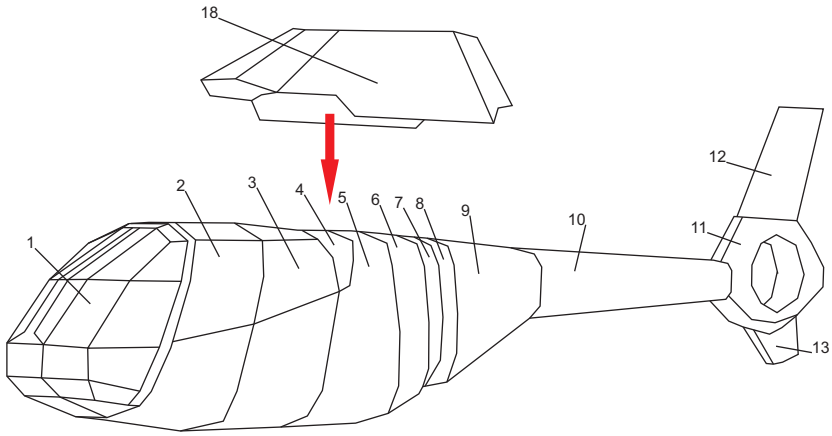

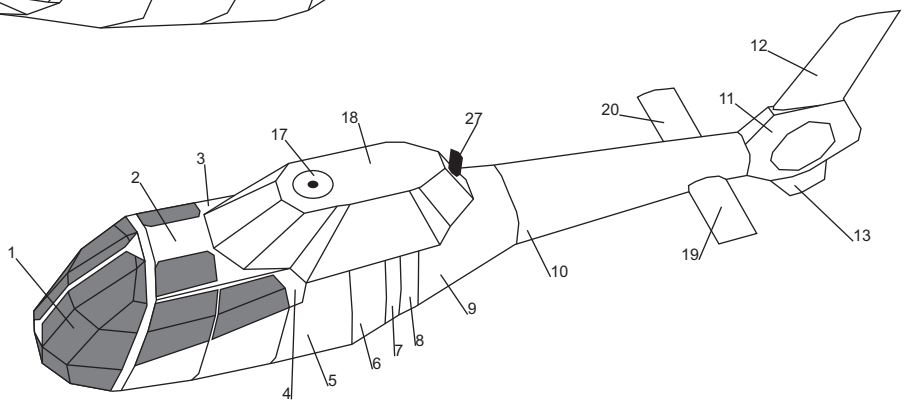



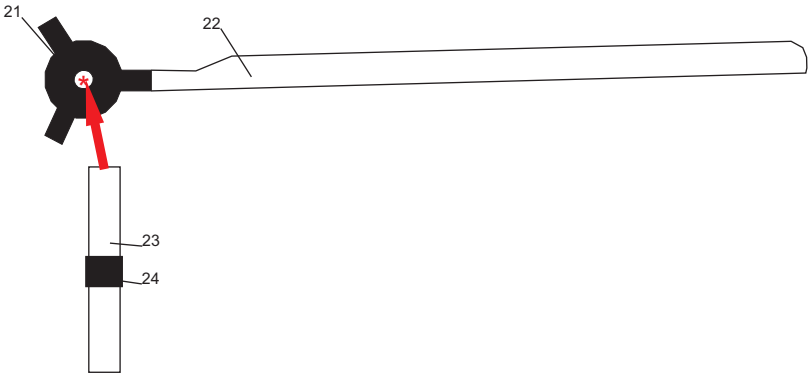



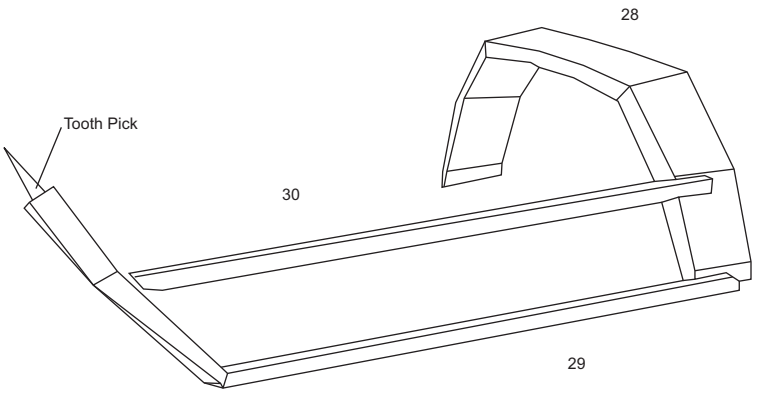

Note:

Part No. 29 & No. 30 Fill with Tooth Pick