Skyway Bucket Paper Model—License Agreement

By downloading this file and the accompanying Licensed Materials, the end user ("Licensee") agrees to conform to this License Agreement (this "Agreement") with Robert Nava, the Disney Experience website [www.disneyexperience.com] ("Licensor").

I. Content of Licensed Materials; Grant of License

The materials that are the subject of this Agreement shall consist of the Skyway Bucket Paper Model in electronic and physical form (hereinafter referred to as the "Licensed Materials").

Licensee acknowledges that the copyright and title to the Licensed Materials and any trademarks or service marks relating thereto remain with Licensor and/or its suppliers. Licensee shall not have right, title or interest in the Licensed Materials except as expressly set forth in this Agreement.

Licensor hereby grants to Licensee non-exclusive use of the Licensed Materials in accordance with this Agreement.

II. Access of Licensed Materials to Licensee

Licensor will provide the Licensed Materials to the Licensee in the following manner:

File Transfer. Copies of the Licensed Materials will be provided to the Licensee through the Disney Experience website at the sole discretion of the Licensor.

III. Fees

Licensee is required to make no payment to Licensor for use of the Licensed Materials.

IV. Authorized Use of Licensed Materials

Authorized Uses. Licensee may make all use of the Licensed Materials as is consistent with the Fair Use Provisions of United States and international law. Nothing in this Agreement is intended to limit in any way whatsoever Licensee's rights under the Fair Use provisions of United States or international law to use the Licensed Materials.

The Licensed Materials may be used for purposes of research, education or other non-commercial use as follows:

Archival/Backup Copy. Upon request of Licensee, Licensee may create one (1) copy of the entire set of Licensed Materials to be maintained as a backup or archival copy during the term of this Agreement.

V. Specific Restrictions on Use of Licensed Materials

Unauthorized Use. Licensee shall not knowingly permit anyone other to use the Licensed Materials.

Modification of Licensed Materials. Licensee shall not modify or create a derivative work of the Licensed Materials without the prior written permission of Licensor.

Removal of Copyright Notice. Licensee may not remove, obscure or modify any copyright or other notices included in the Licensed Materials.

Distribution Rights. Licensee has no rights to transfer, host, or re-distribute the Licensed Materials or its derivatives under any circumstances or by any means available now or in the future.

Commercial Purposes. Other than as specifically permitted in this Agreement, Licensee may not use the Licensed Materials for commercial purposes, including but not limited to the sale of the Licensed Materials or bulk reproduction or distribution of the Licensed Materials in any form.

VI. Licensor Performance Obligations

Availability of Licensed Materials. Licensor shall make the Licensed Materials available to Licensee at his/her discretion.

Notification of Modifications of Licensed Materials. Licensee understands that from time to time the Licensed Materials may be added to, modified, or deleted from by Licensor and/or that portions of the Licensed Materials may migrate to other formats.

Completeness of Content. Where applicable, Licensor will inform Licensee of instances where online content differs from the print versions of the Licensed Materials.

Where applicable, Licensor shall use reasonable efforts to ensure that the online content is at least as complete as print versions of the Licensed Materials, represents complete, accurate and timely replications of the corresponding content contained within the print versions of such Materials, and will cooperate with Licensee to identify and correct errors or omissions.

Withdrawal of Licensed Materials. Licensor reserves the right to withdraw from the Licensed Materials any item or part of an item for which it no longer retains the right to publish, or which it has reasonable grounds to believe infringes copyright or is defamatory, obscene, unlawful or otherwise objectionable.

VII. Licensee Performance Obligations

Protection from Unauthorized Use. Licensee shall use reasonable efforts to protect the Licensed Materials from any use that is not permitted under this Agreement. In the event of any unauthorized use of the Licensed Materials by an Authorized User, (a) Licensor may terminate such Authorized User's access to the Licensed Materials, (b) Licensor may terminate the access of the Internet Protocol ("IP") address(es) from which such unauthorized use occurred, and/or (c) Licensee shall terminate such Authorized User's access to the Licensed Materials upon Licensor's request. Licensor shall take none of the steps described in this paragraph without first providing reasonable notice to Licensee and cooperating with the Licensee to avoid recurrence of any unauthorized use.

VIII. Early Termination

In the event that either party believes that the other materially has breached any obligations under this Agreement, or if Licensor believes that Licensee has exceeded the scope of the License, such party shall so notify the breaching party in writing. The breaching party shall have 1 week from the receipt of notice to cure the alleged breach and to notify the non-breaching party in writing that cure has been effected. If the breach is not cured within the 1 week, the non-breaching party shall have the right to terminate the Agreement without further notice.

Upon Termination of this Agreement for cause online access to the Licensed Materials by Licensee and shall be terminated. Authorized copies of digital Licensed Materials must be destroyed immediately.

IX. Perpetual License

Except for termination for cause, Licensor hereby grants to Licensee a nonexclusive, royalty-free, perpetual license to use any Licensed Materials that were accessible during the term of this Agreement. Such use shall be in accordance with the provisions of this Agreement. The means by which Licensee shall have access to such Licensed Materials shall be in a manner and form substantially equivalent to the means by which access is provided under this Agreement.

X. Warranties

Subject to the Limitations set forth elsewhere in this Agreement:

Licensor warrants that it has the right to license the rights granted under this Agreement to use Licensed Materials, that it has obtained any and all necessary permissions from third parties to license the Licensed Materials, and that use of the Licensed Materials by Authorized Users in accordance with the terms of this Agreement shall not infringe the copyright of any third party.

XI. Limitations on Warranties

Notwithstanding anything else in this Agreement:

Neither party shall be liable for any indirect, special, incidental, punitive or consequential damages, including but not limited to loss of data, business interruption, or loss of profits, arising out of the use of or the inability to use the Licensed Materials.

Licensor makes no representation or warranty, and expressly disclaims any liability with respect to the content of any Licensed Materials, including but not limited to errors or omissions contained therein, libel, infringement of rights of publicity, privacy, trademark rights, moral rights, or the disclosure of confidential information.

Except for the express warranties stated herein, the Licensed Materials are provided on an "as is" basis, and Licensor disclaims any and all other warranties, conditions, or representations (express, implied, oral or written), relating to the Licensed Materials or any part thereof, including, without limitation, any and all implied warranties of quality, performance, merchantability or fitness for a particular purpose. Licensor makes no warranties respecting any harm that may be caused by the transmission of a computer virus, worm, time bomb, logic bomb or other such computer program. Licensor further expressly disclaims any warranty or representation to Authorized Users, or to any third party.

XII. Assignment and Transfer

Neither party may assign, directly or indirectly, all or part of its rights or obligations under this Agreement without the prior written consent of the other party, which consent shall not be unreasonably withheld or delayed.

XIII. Governing Law

This Agreement shall be interpreted and construed according to, and governed by, the laws of California, excluding any such laws that might direct the application of the laws of another jurisdiction. The federal or state courts located in California shall have jurisdiction to hear any dispute under this Agreement.

XIV. Entire Agreement

This Agreement constitutes the entire agreement of the parties and supersedes all prior communications, understandings and agreements relating to the subject matter hereof, whether oral or written.

XV. Amendment

No modification or claimed waiver of any provision of this Agreement shall be valid except by written amendment signed by authorized representatives of Licensor and Licensee.



Skyway Bucket

Look through the pages and become acquainted with the various pieces. Read the instructions and study the illustrations to know what/where to cut/fold. Before gluing, always dry-fit the pieces to ensure that they fit. If they don't fit, you may have the wrong pieces.

When assembling the model and following the instructions, do not take the illustrations too literally. In many cases, pieces will be simplified. Other times, pieces (or entire sections) may be missing that were once displayed. This does not mean you should disassemble your model—ever.

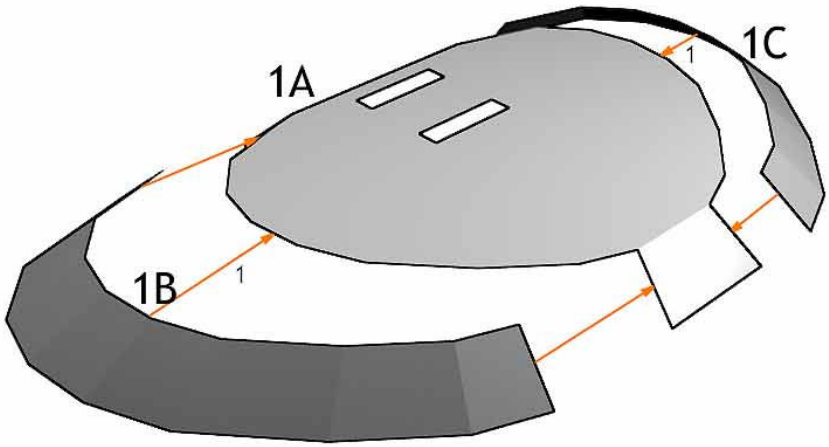

1. Glue pieces 1A-C together.
2. Fold and glue pieces 1E&F to themselves as shown (tabs pointing downward), then glue the edges of piece 1E to the white lines on pieces 1F.
3. Insert the bottom tabs into the holes on the base. Fold and glue the tabs to the underside of the base.
4. Assemble piece 1D and glue to the underside of the base. Be sure to line the tabs up to the hole as shown.
5. Glue piece 1G over the second hole. When dry, turn the stand assembly right-side up and place about 5 pennies into the rear pillar. This will help balance the model.
6. Fold pieces 1P and glue to piece 1Q as shown. The four wider ends should point down. When dry, insert the piece into the top of the hollow colum that faces the front of the base. Lightly glue into place, making sure that the top is flush with the top of the column.
7. Assemble and glue piece 1H to the top & front side of the pillars.
8. Assemble and glue piece 1J to the top of piece 1H. Make sure that the white area faces outward, toward the front edge.

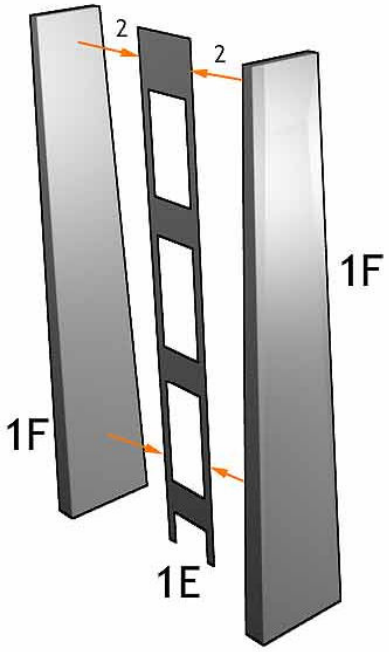

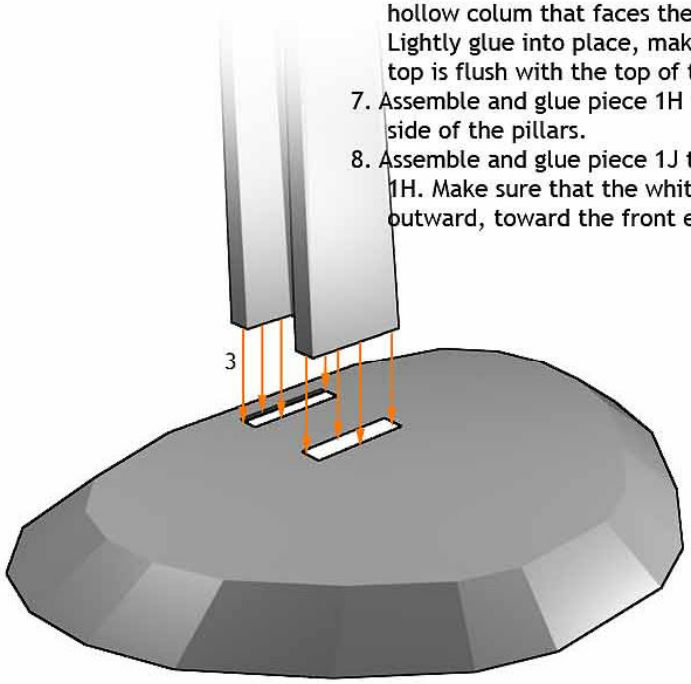

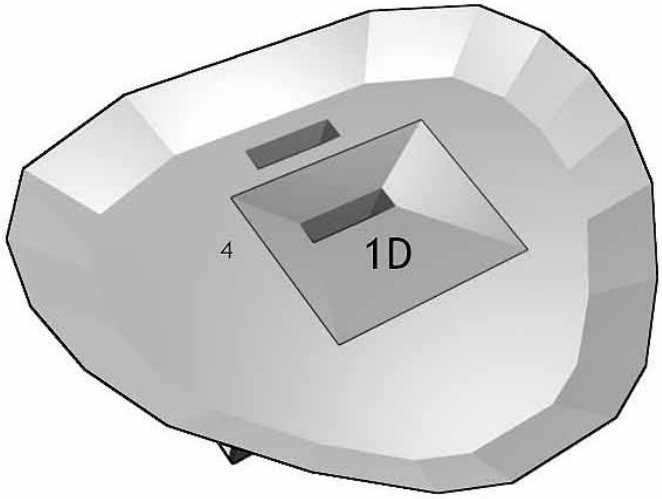

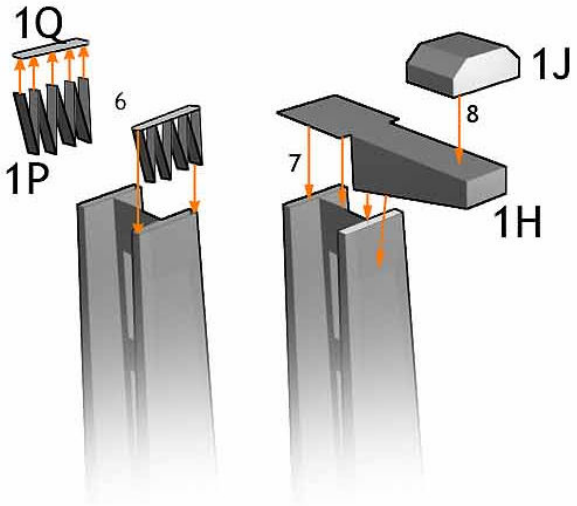

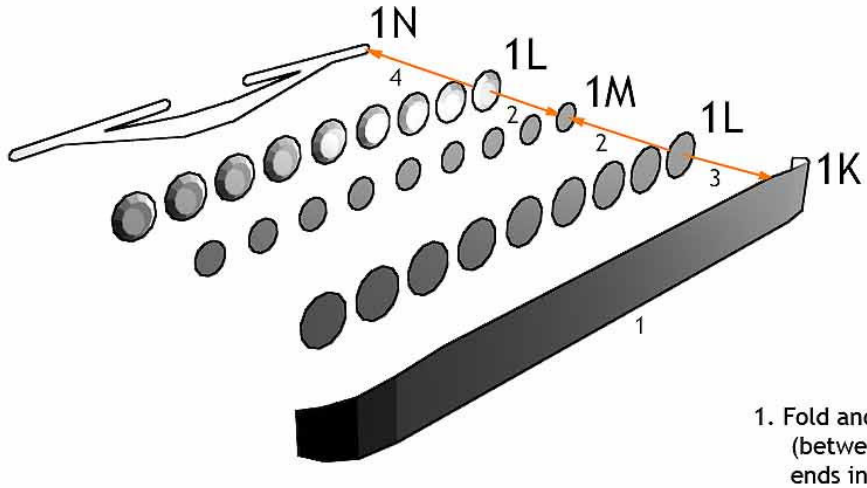

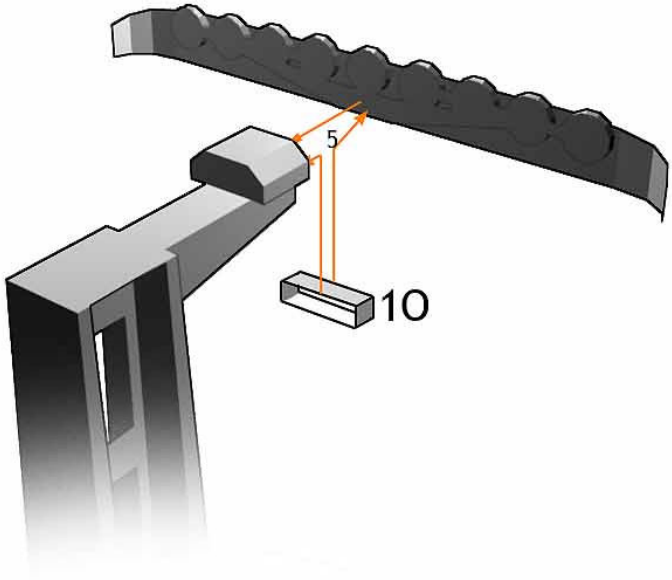

1. Fold and glue piece 1K to itself. Gently bend (between the dotted lines and the ends) the ends inward, towards the shaded side.
2. Fold and Glue pieces 1L to both sides of pieces 1M.
3. Glue one side of the wheels to the shaded side of piece 1K. Align them so that they center on the white dots.
4. Fold and glue piece 1N to itself. When dry, glue it to the other side of the wheels, centering the white dots.
5. When dry, glue the wheel assembly to the stand assembly. Assemble piece 1O and glue between the wheel assembly and the stand assembly; this will help keep the wheel assembly from bending from the weight of the bucket.
6. Glue pieces 2A-C together with the printed side facing inward, then attach piece 2D.
7. Glue pieces 2E-H together with the printed side facing outward, then attach piece 2J.

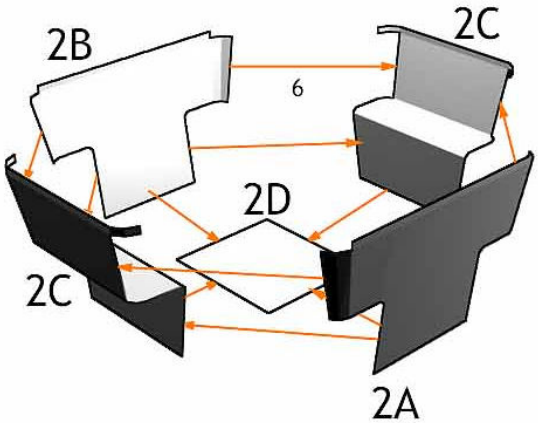

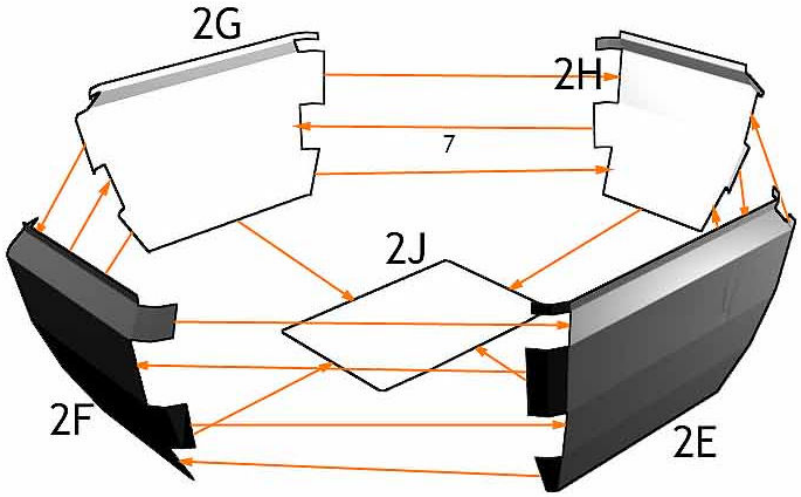

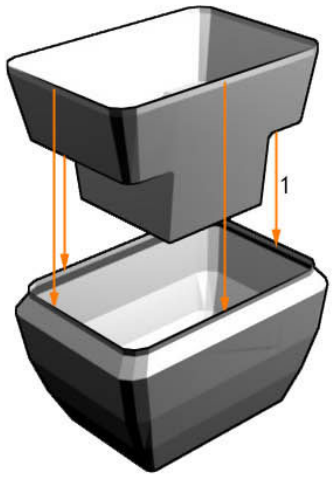

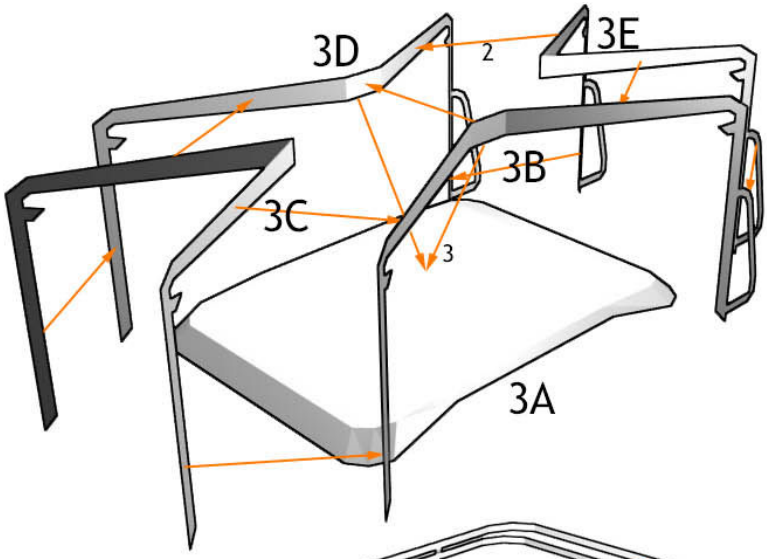



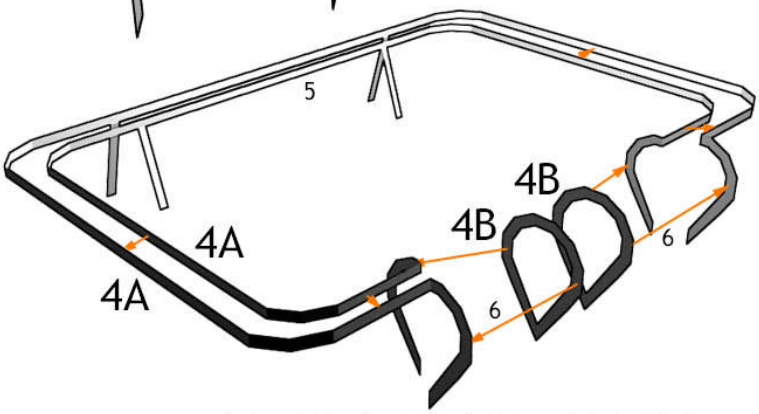

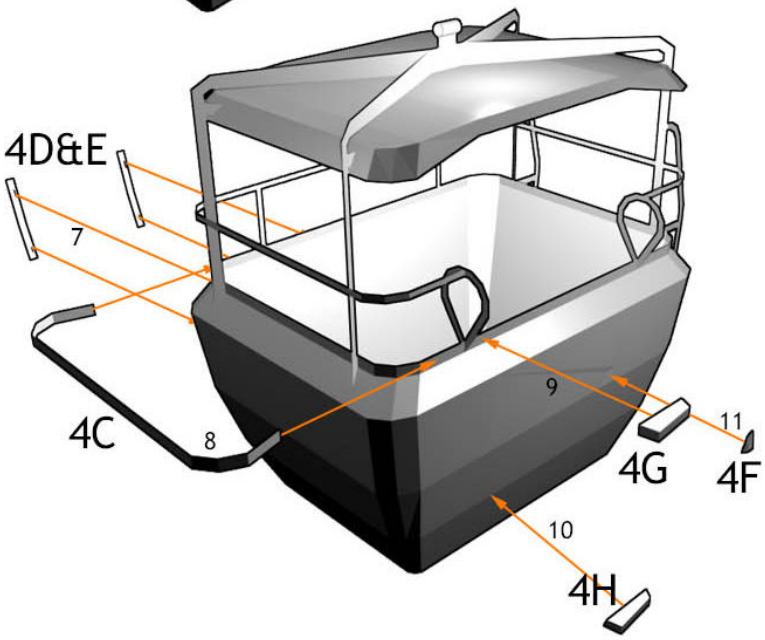

1. Insert the inner bucket assembly inside the outer bucket assembly. Be sure that the doors match up.
2. Assemble piece 3A, and glue pieces 3B-E together as shown.
3. When dry, glue the roof supports to the top of piece 3A, matching the edges up with the lines.
4. Glue piece 3F to the sides of the roof supports. Be sure that the middle portion of piece 3F DOES NOT get glued together so that it forms a tube. Glue the ends of the roof supports to the bucket assembly, matching them up with the lines.
5. Fold the ends (handles) of pieces 4A, then glue the main shaft together. DO NOT glue the rear stems or end handles together!
6. Glue pieces 4B to the ends of pieces 4A, completing the handrail. The bottom tip of the handles should be cut down the middle. When moderately dry, glue the rear stems together, sandwching the bucket's rear white lip (opposite of the door). When moderately dry, gently bend the handrail around the four main roof support poles. Glue the handles over both sides of the bucket's front lip.
7. Fold and glue pieces 4D&E to themselves, then glue them to the backside of the bucket.
8. Fold and glue piece 4C to itself. Gently bend it and glue it to the bucket's lip.
9. Assemble pieces 4G&H and glue them the the bucket's front body and lip.
10. Glue piece 4F to the bucket door.

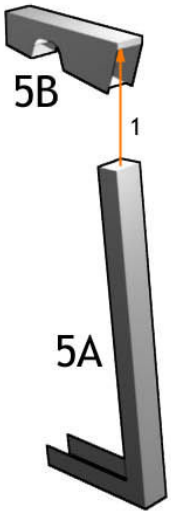

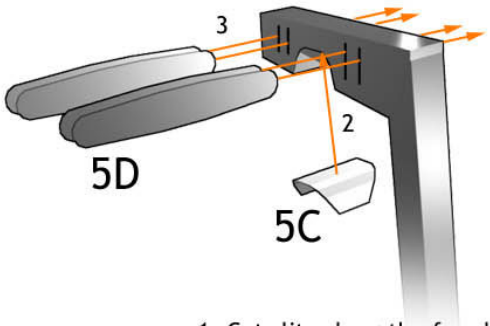

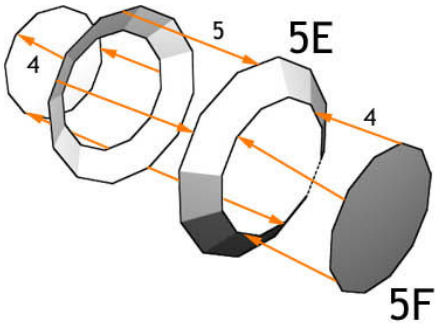

1. Cut slits along the four black lines on piece 5B. Assemble pieces 5A&B. Glue piece 5A into piece 5B. Note that these will NOT form a 90-degree angle.
2. Fold and glue pieces 5C&D to themselves. Glue piece 5C into the notch on piece 5B.
3. When dry, slide pieces 5D through the slots on piece 5B. The sides with the white dots should face each other. The fit will be tight, so gluing is not necessary.
4. Assemble pieces 5E. Glue pieces 5F to the inner edge of pieces 5E to form the wheel halves.
5. Glue the wheel halves together as shown.
6. When dry, glue the wheels between pieces 5D. Be sure to align the centers with the dots.
7. Glue the arm assembly to the sides of the small tube on top of the bucket assembly. The arm should jut out towards the front (door side) of the bucket. Let dry.
8. Hang the bucket from the center wheel on the stand. Gluing is not needed unless you prefer it. For added realism, you can bend a piece of wire (a clothes hanger, painted black, works fine) to fit along the tops of the stand's wheels.This will simulate the wire cable that the buckets ride on.

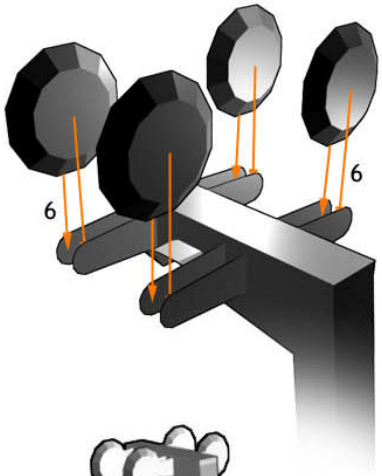

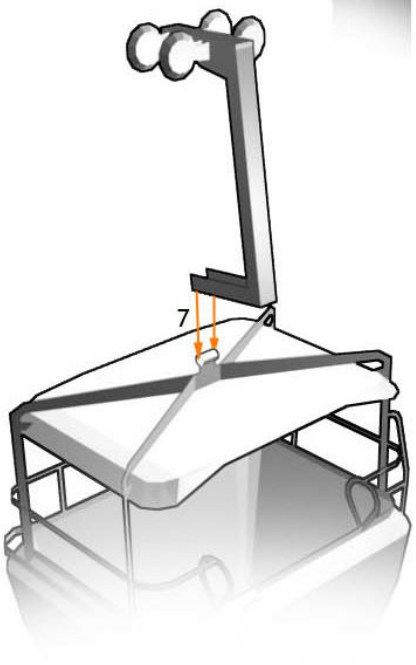

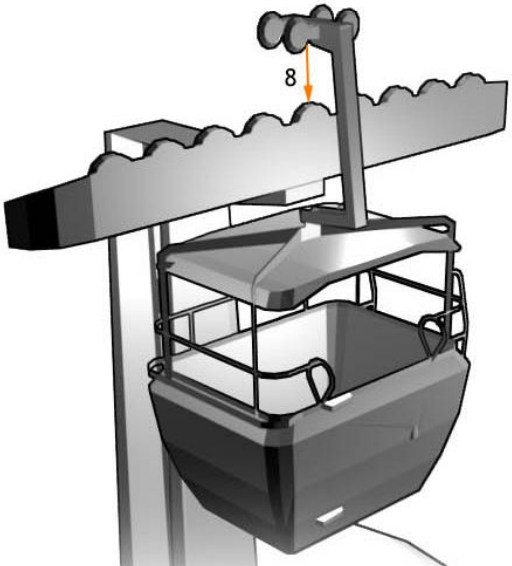

Congratulations!

You've completed the model.

Download and create even more out-of-this-world projects, all waiting for you at

THE DISNEY EXPERIENCE

ADD A TOUCH OF DISNEY MAGIC TO YOUR COMPUTER

WWW.DISNEYEXPERIENCE.COM