ARES METEOR ORBITAL DROP VEHICLE FRAME 1

©2009-2010 Christopher Roe/Ebbles Miniatures. All rights reserved. Permission granted to photocopy for personal, non-commercial use only.

01

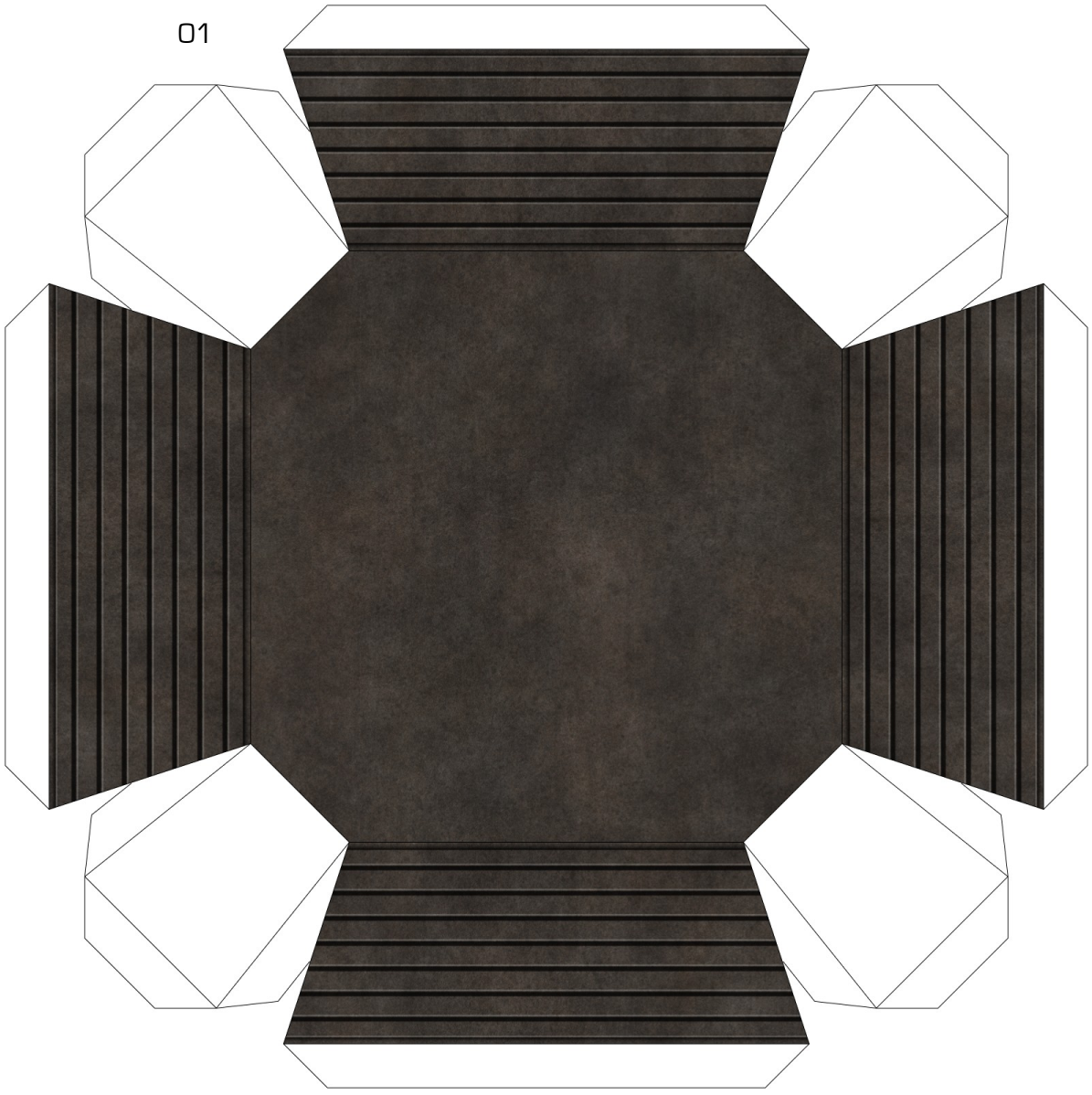



02



03

©2009-2010 Christopher Roe/Ebbles Miniatures. All rights reserved. Permission granted to photocopy for personal, non-commercial use only.

06

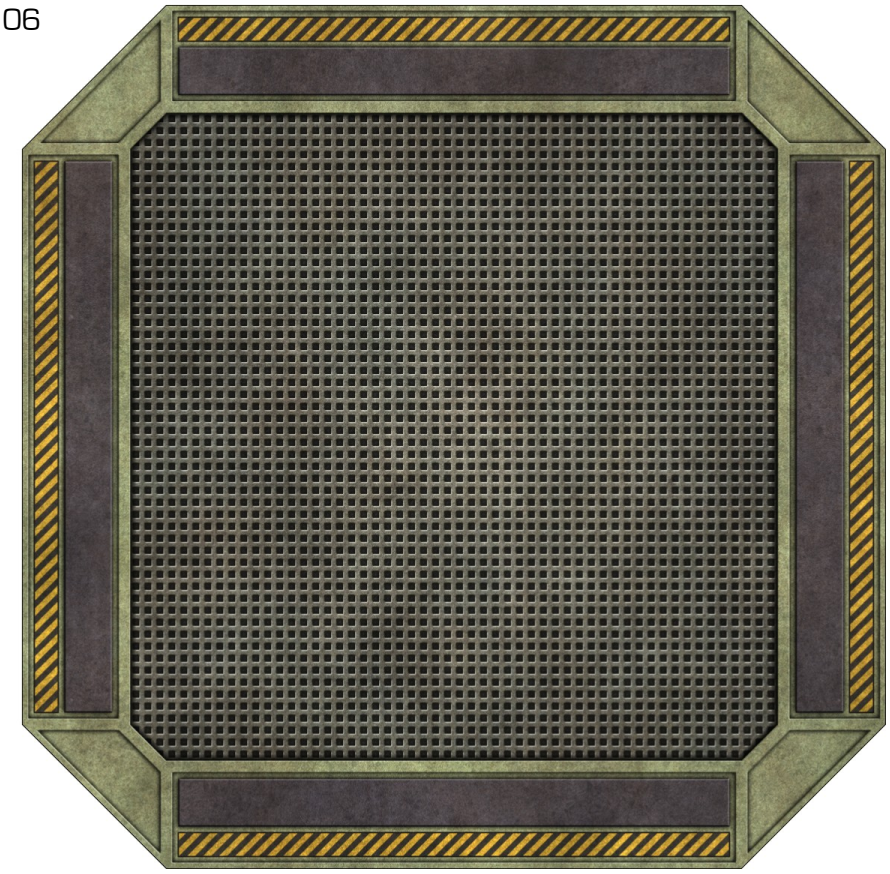

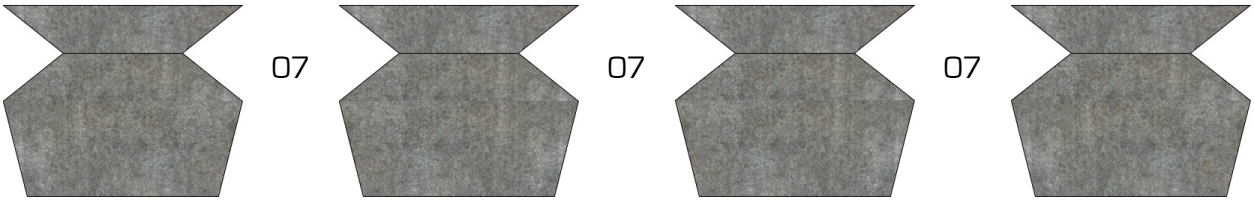

07 07 07



04



05

©2009-2010 Christopher Roe/Ebbles Miniatures. All rights reserved. Permission granted to photocopy for personal, non-commercial use only.

08

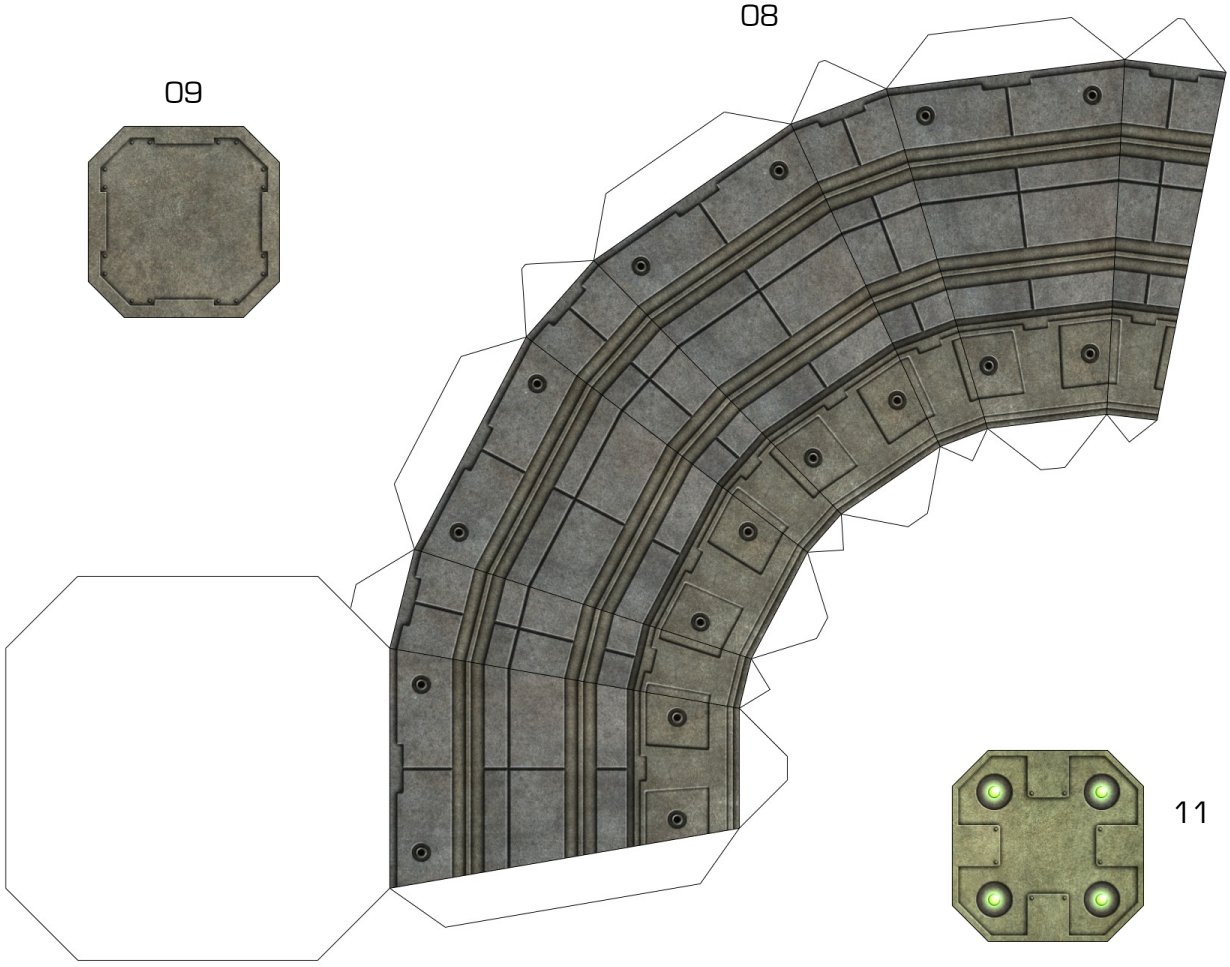

09

11

10

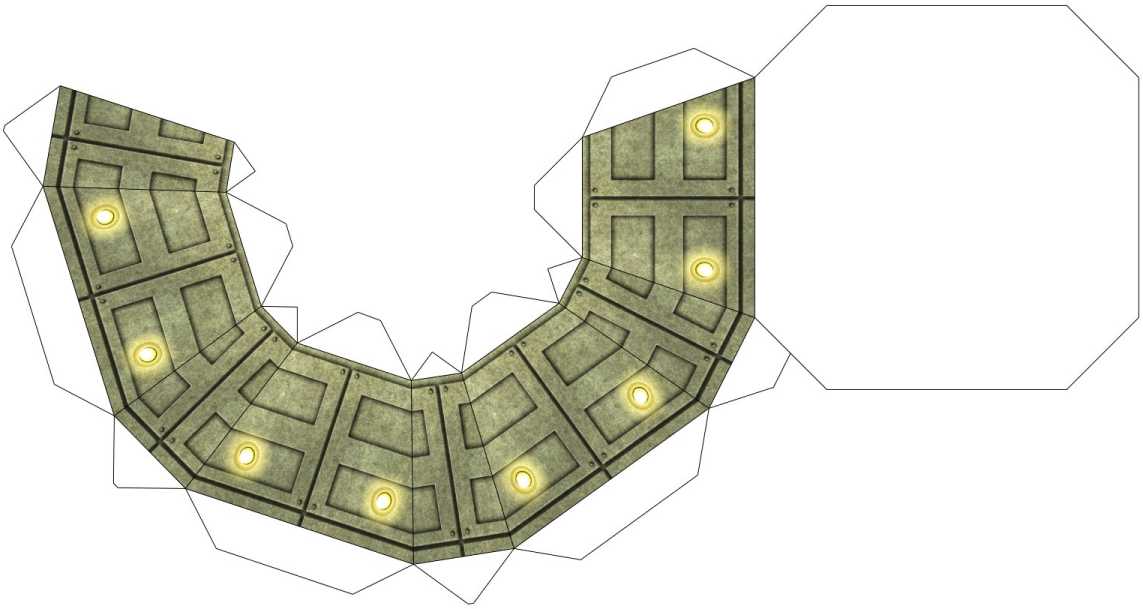

©2009-2010 Christopher Roe/Ebbles Miniatures. All rights reserved. Permission granted to photocopy for personal, non-commercial use only.

12

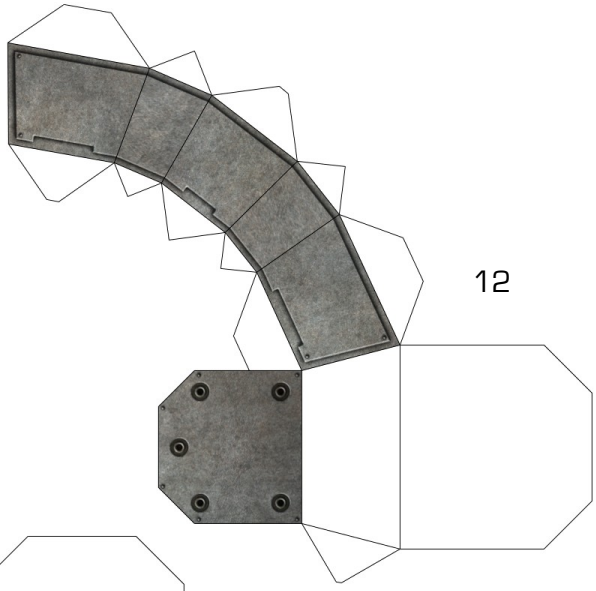

13

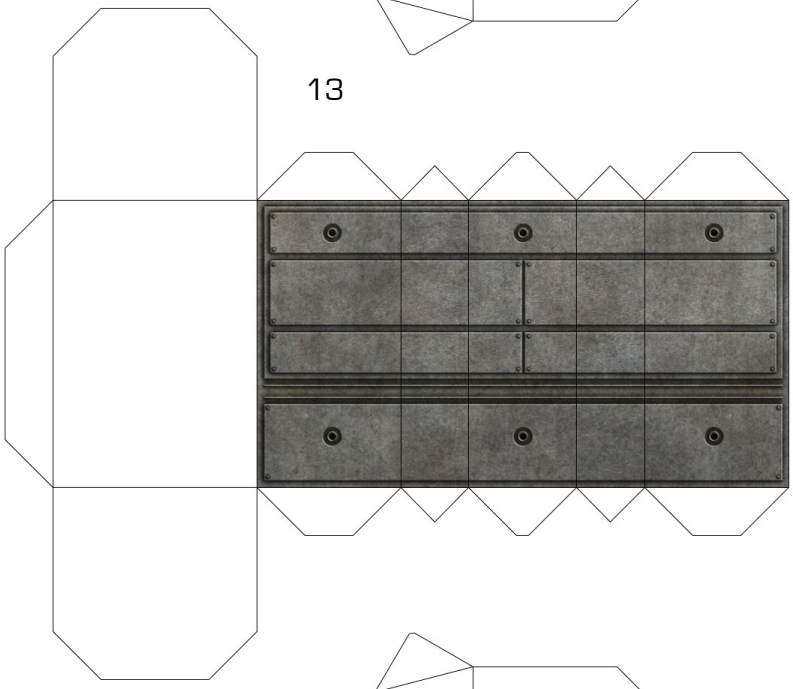

14

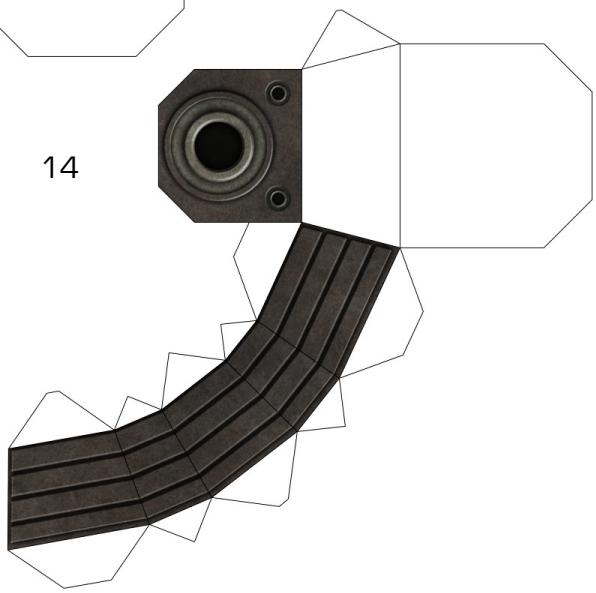

15

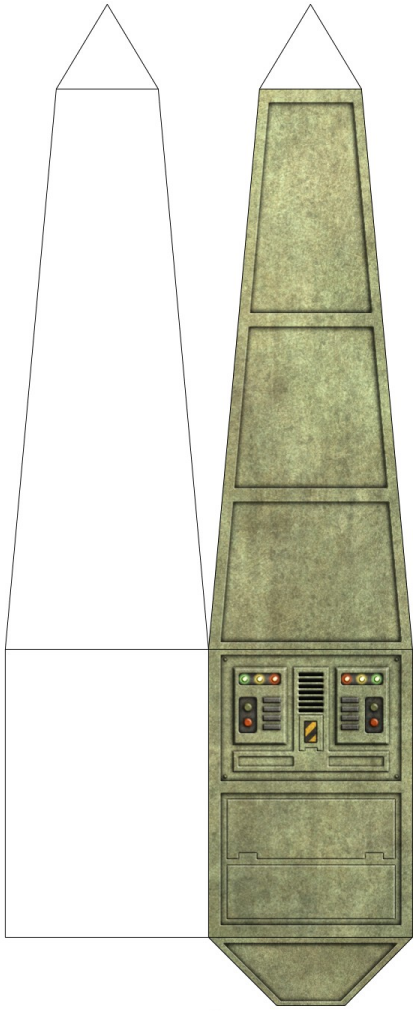

16

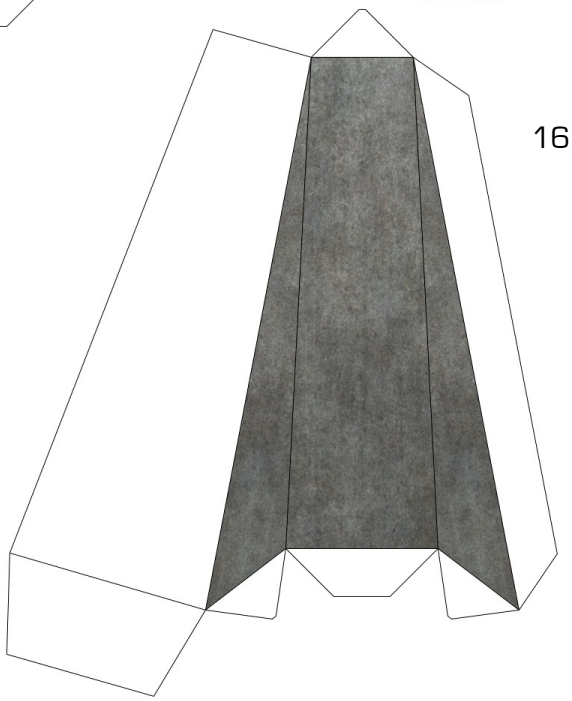

©2009-2010 Christopher Roe/Ebbles Miniatures. All rights reserved. Permission granted to photocopy for personal, non-commercial use only.

12

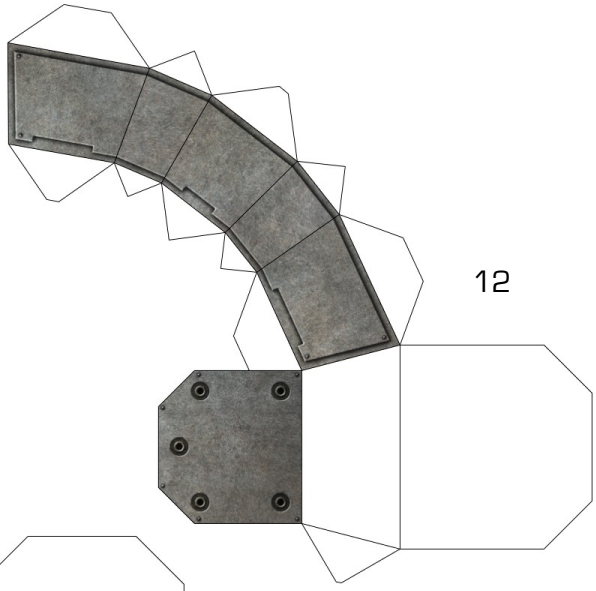

13

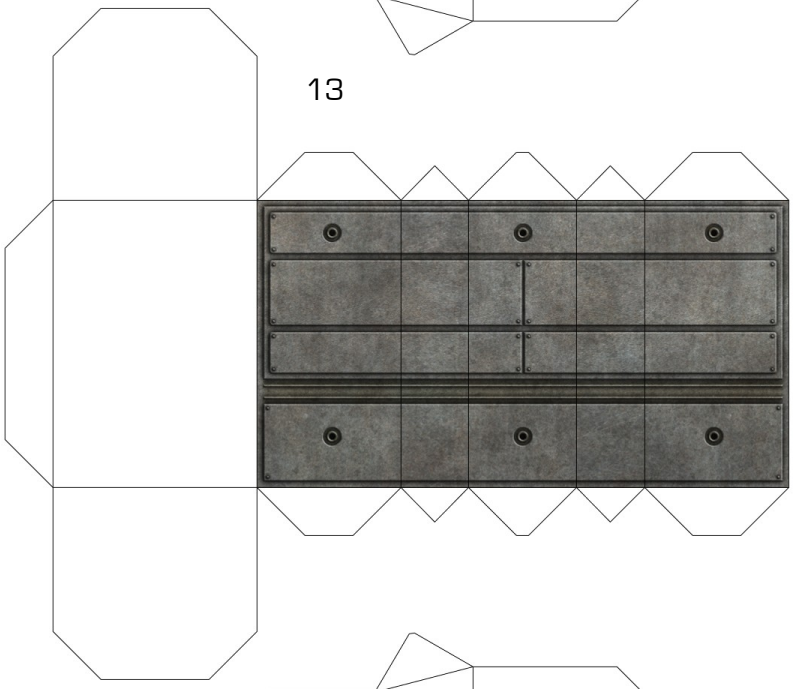

14

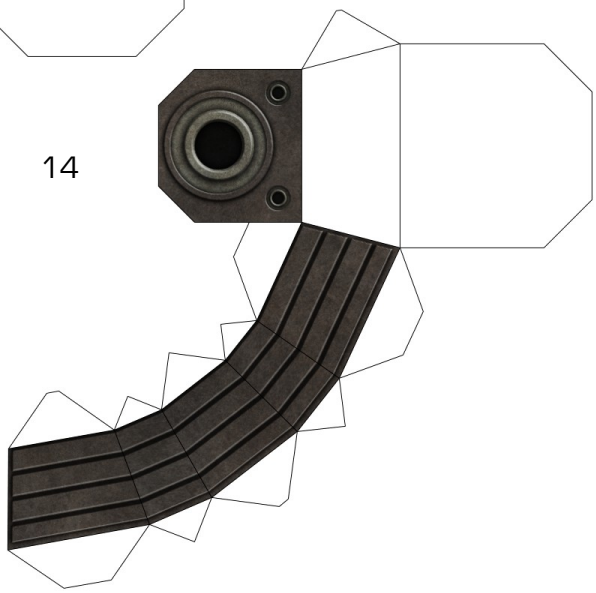

15

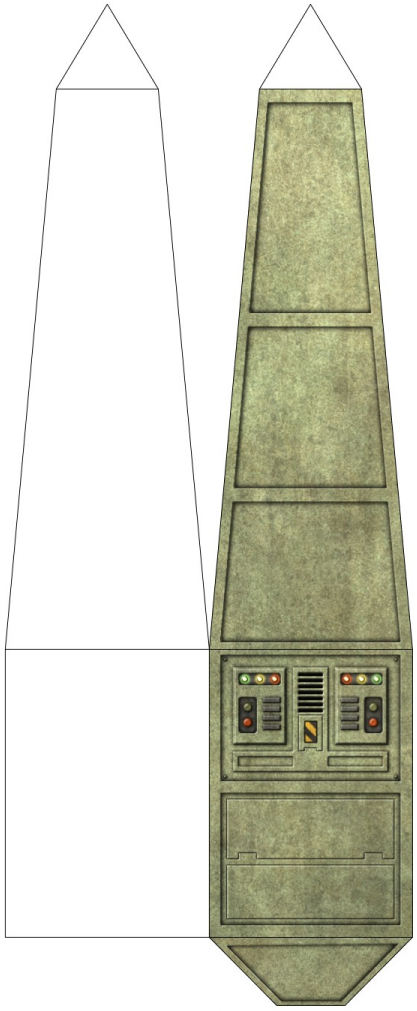

16

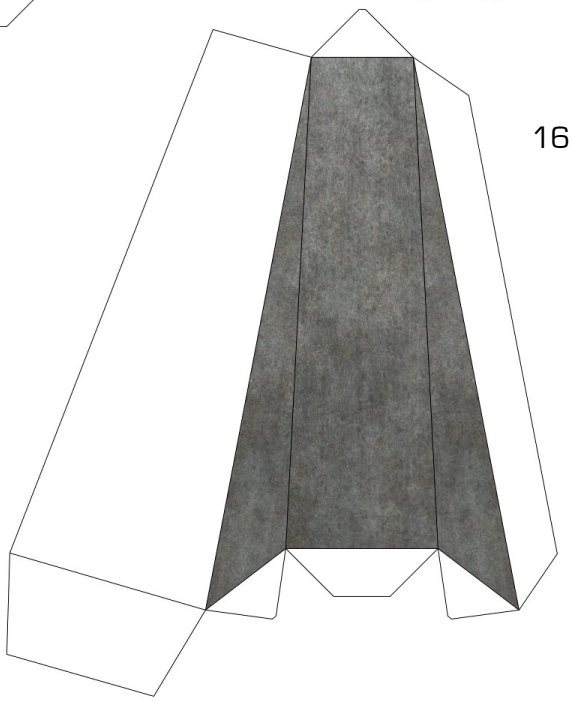

©2009-2010 Christopher Roe/Ebbles Miniatures. All rights reserved. Permission granted to photocopy for personal, non-commercial use only.

12

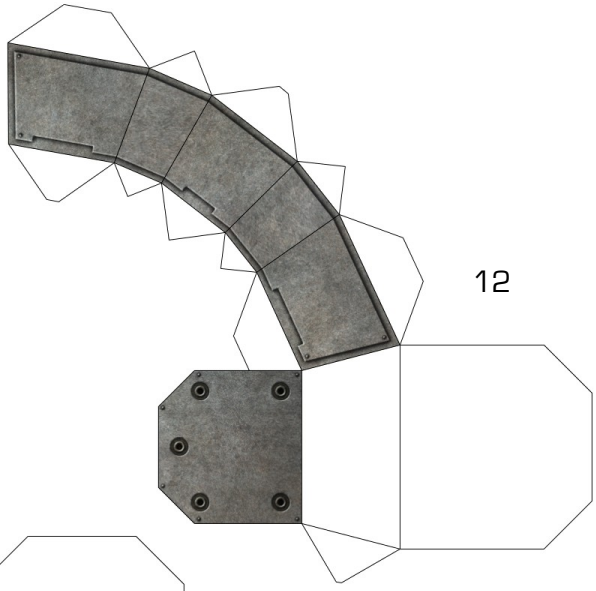

13

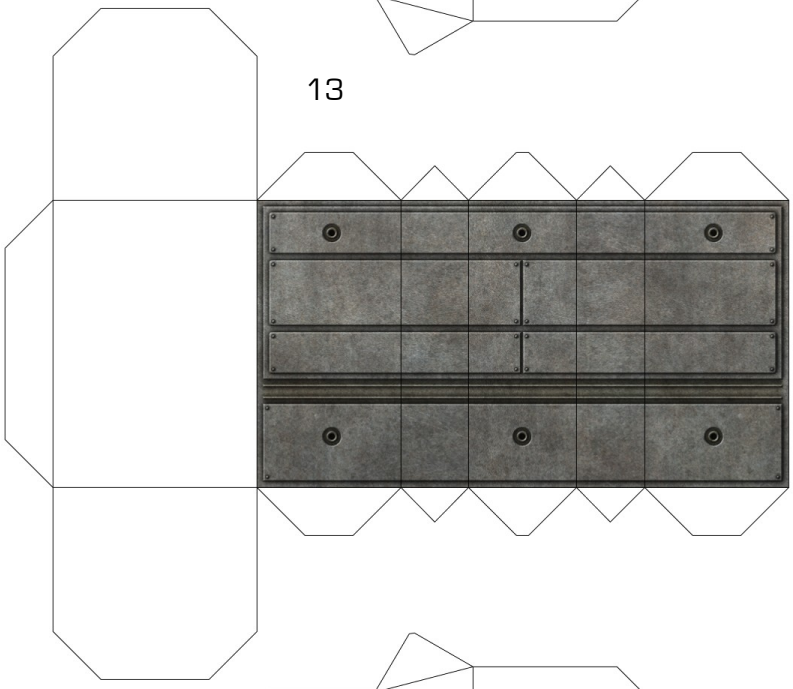

14

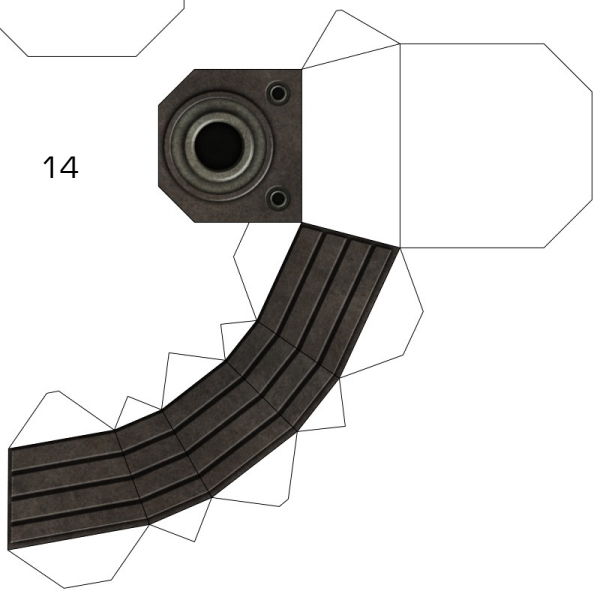

15

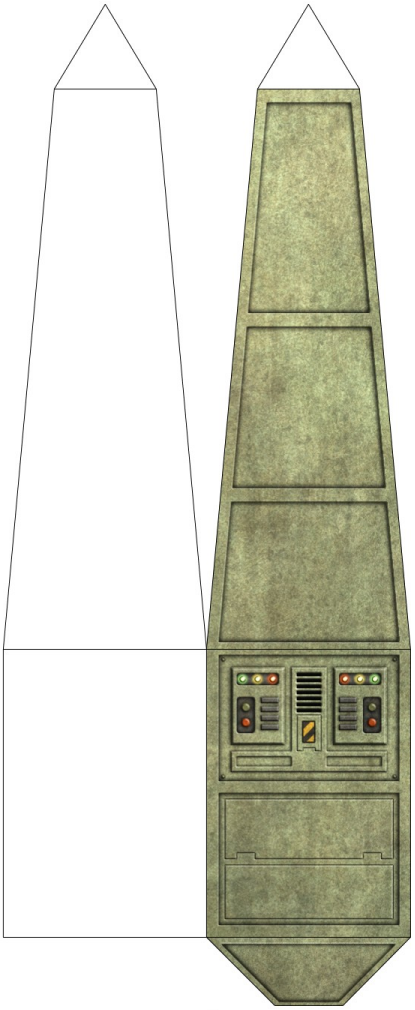

16

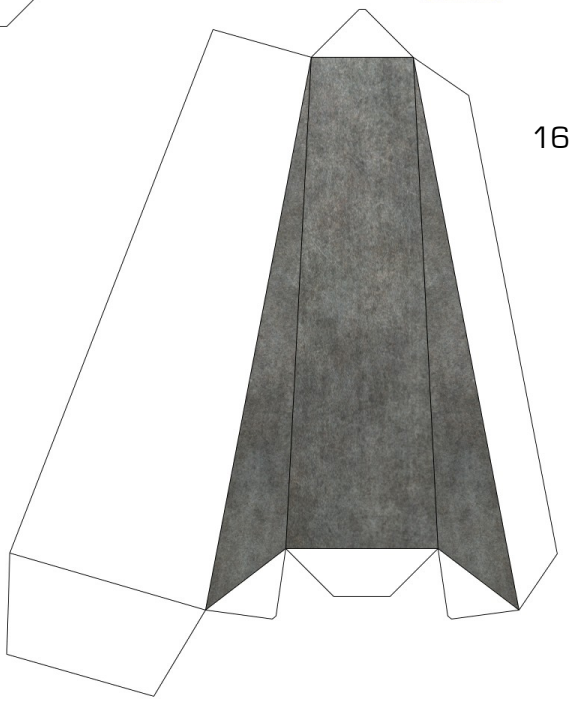

©2009-2010 Christopher Roe/Ebbles Miniatures. All rights reserved. Permission granted to photocopy for personal, non-commercial use only.

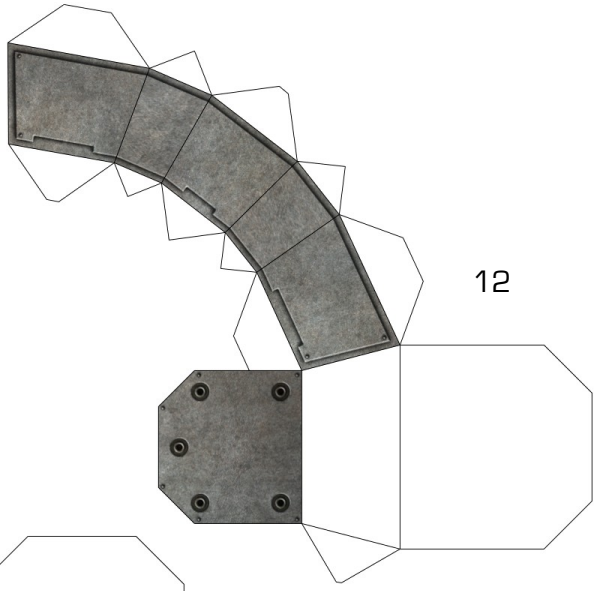

12

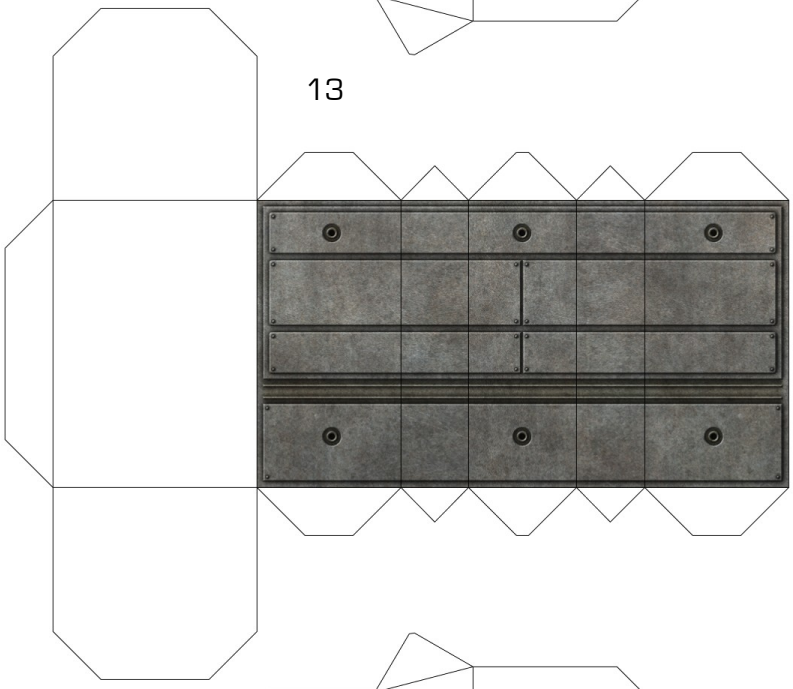

13

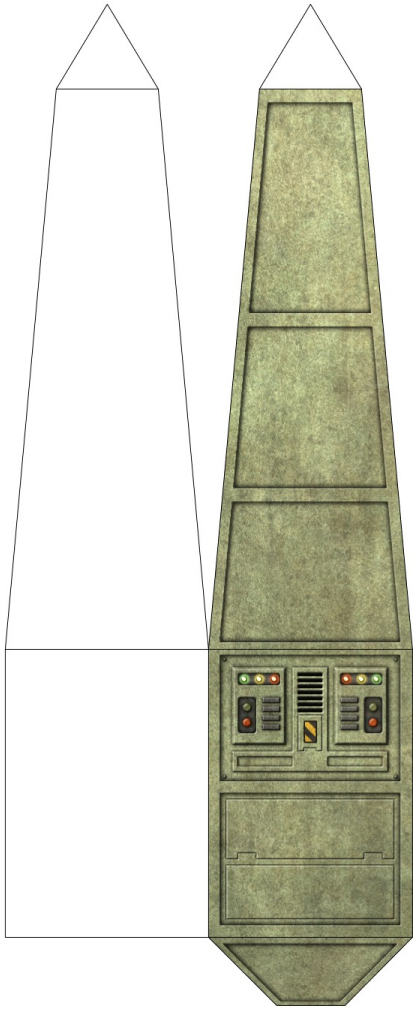

15

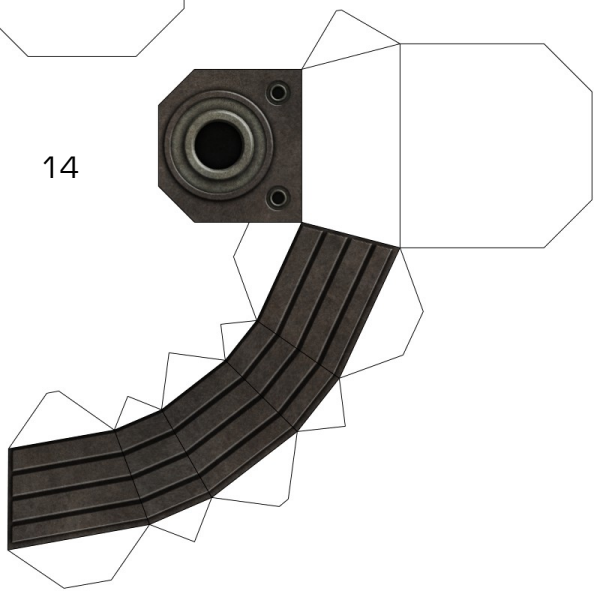

14

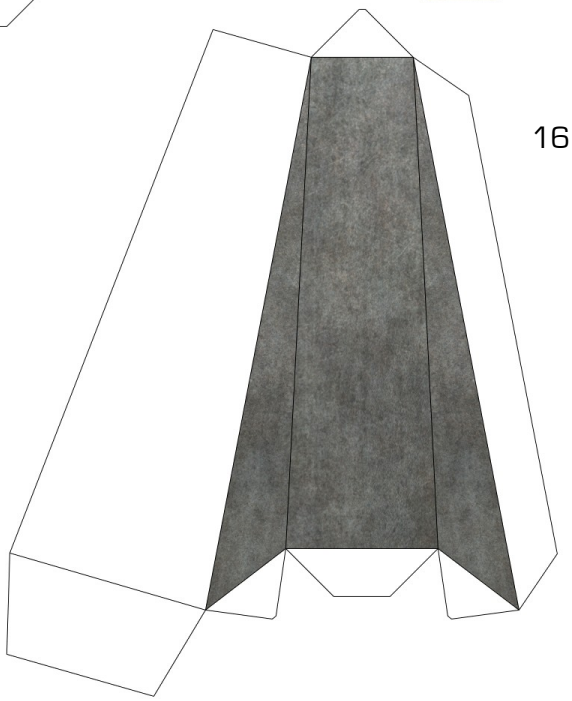

16

©2009-2010 Christopher Roe/Ebbles Miniatures. All rights reserved. Permission granted to photocopy for personal, non-commercial use only.

18

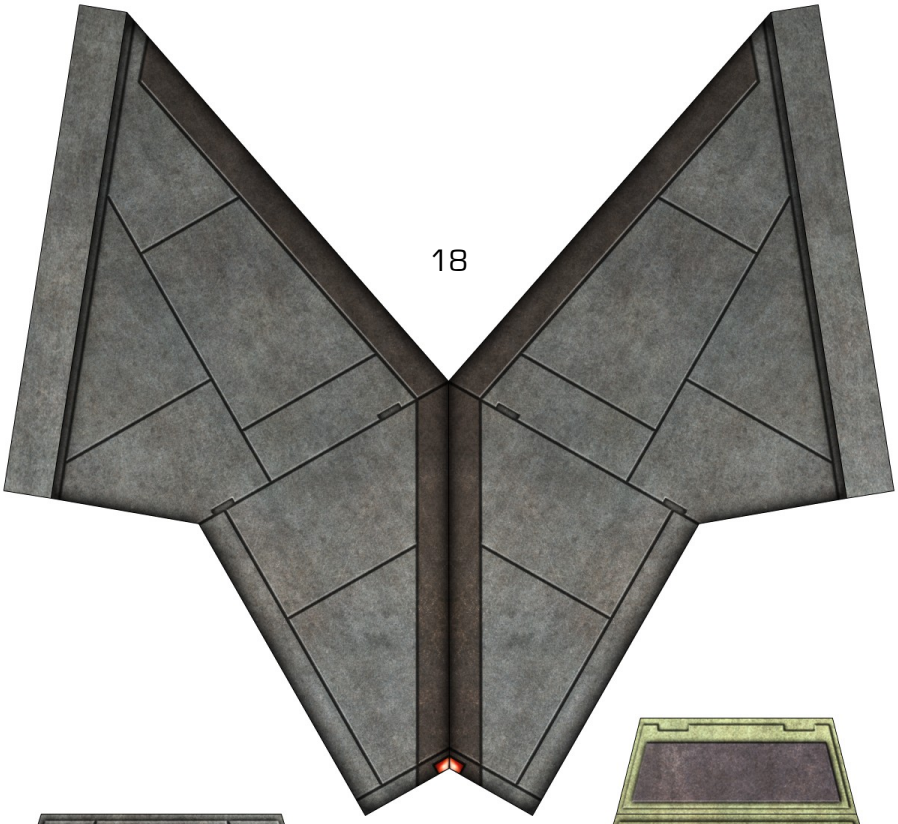

17

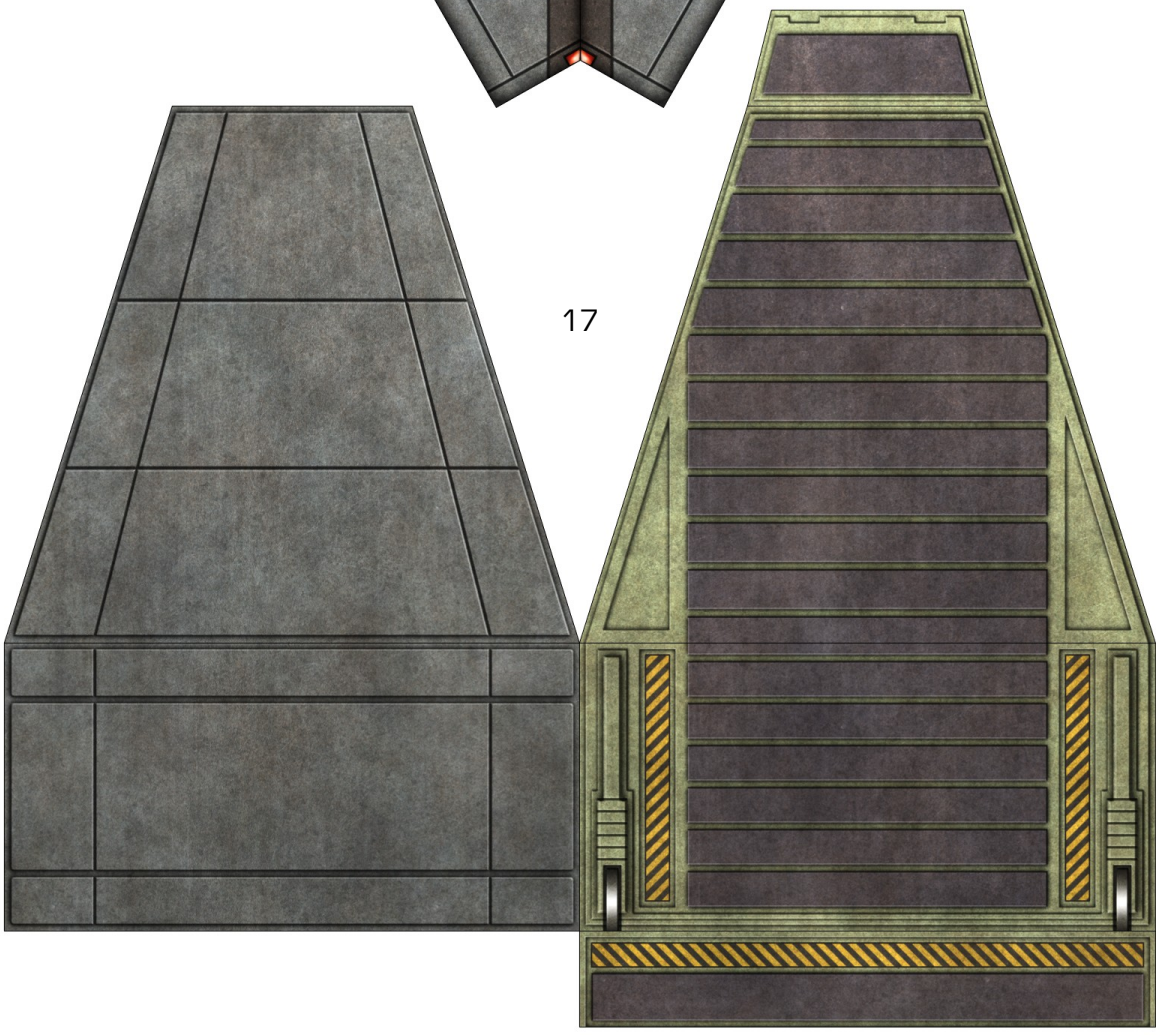

©2009-2010 Christopher Roe/Ebbles Miniatures. All rights reserved. Permission granted to photocopy for personal, non-commercial use only.

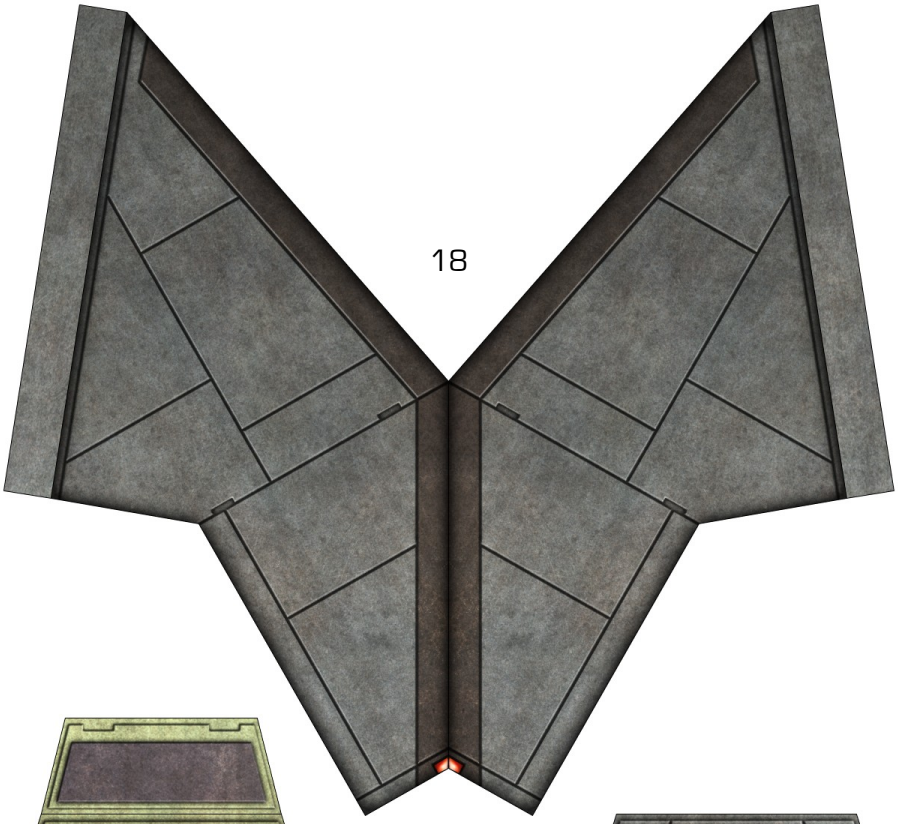

18

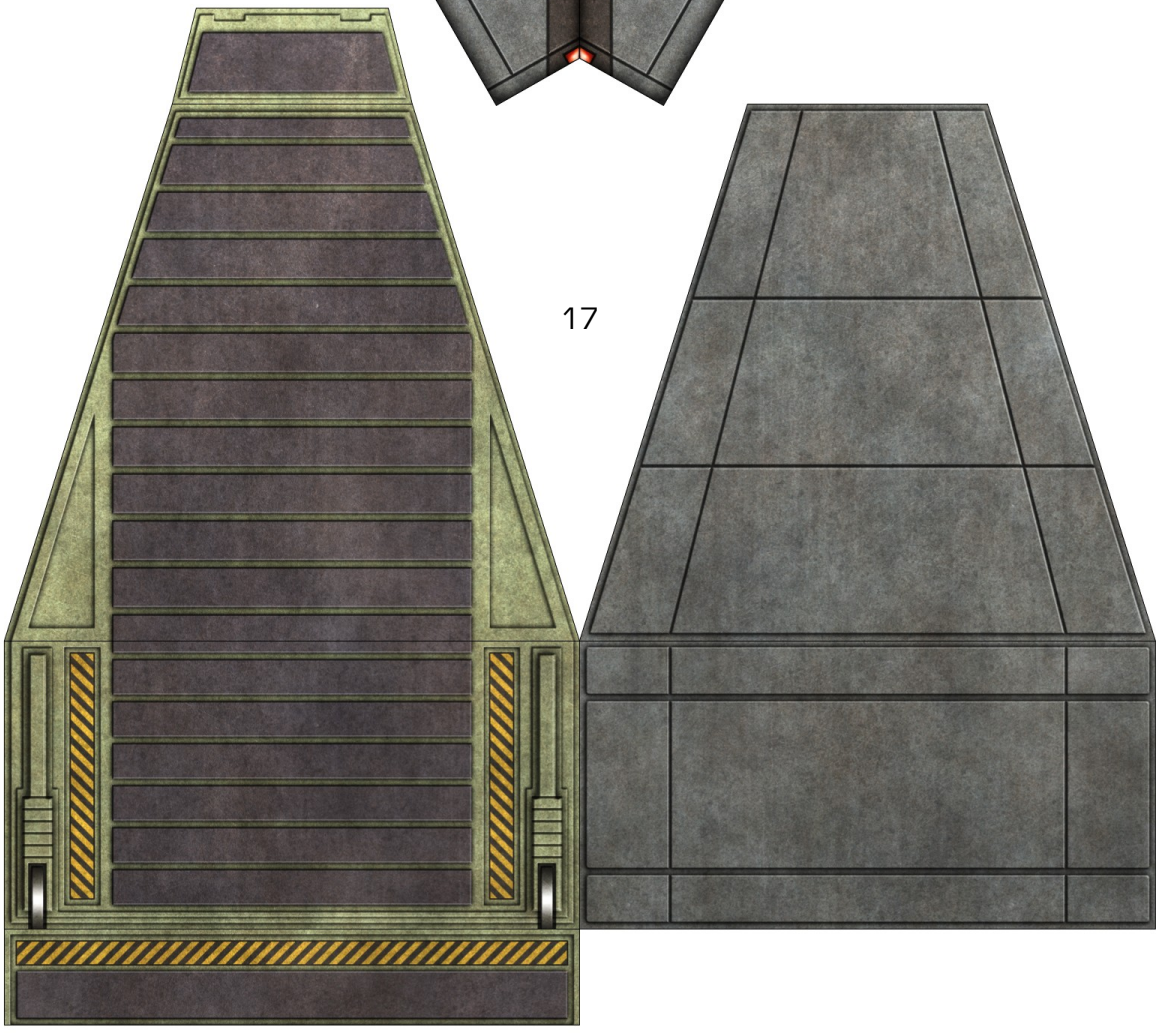

17

©2009-2010 Christopher Roe/Ebbles Miniatures. All rights reserved. Permission granted to photocopy for personal, non-commercial use only.

18

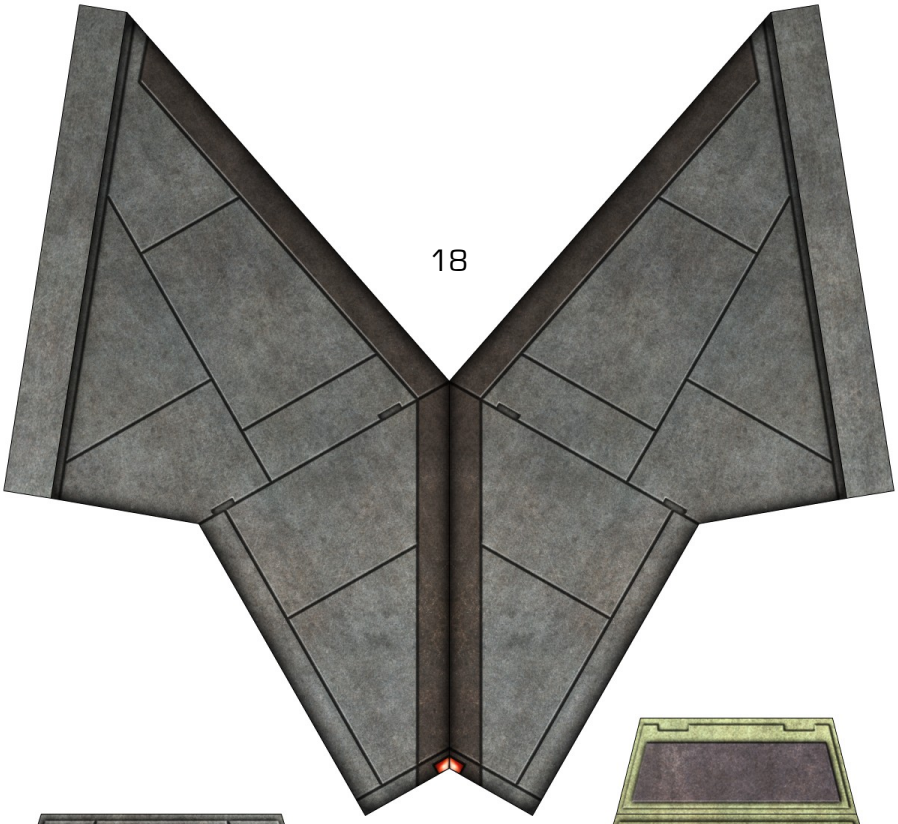

17

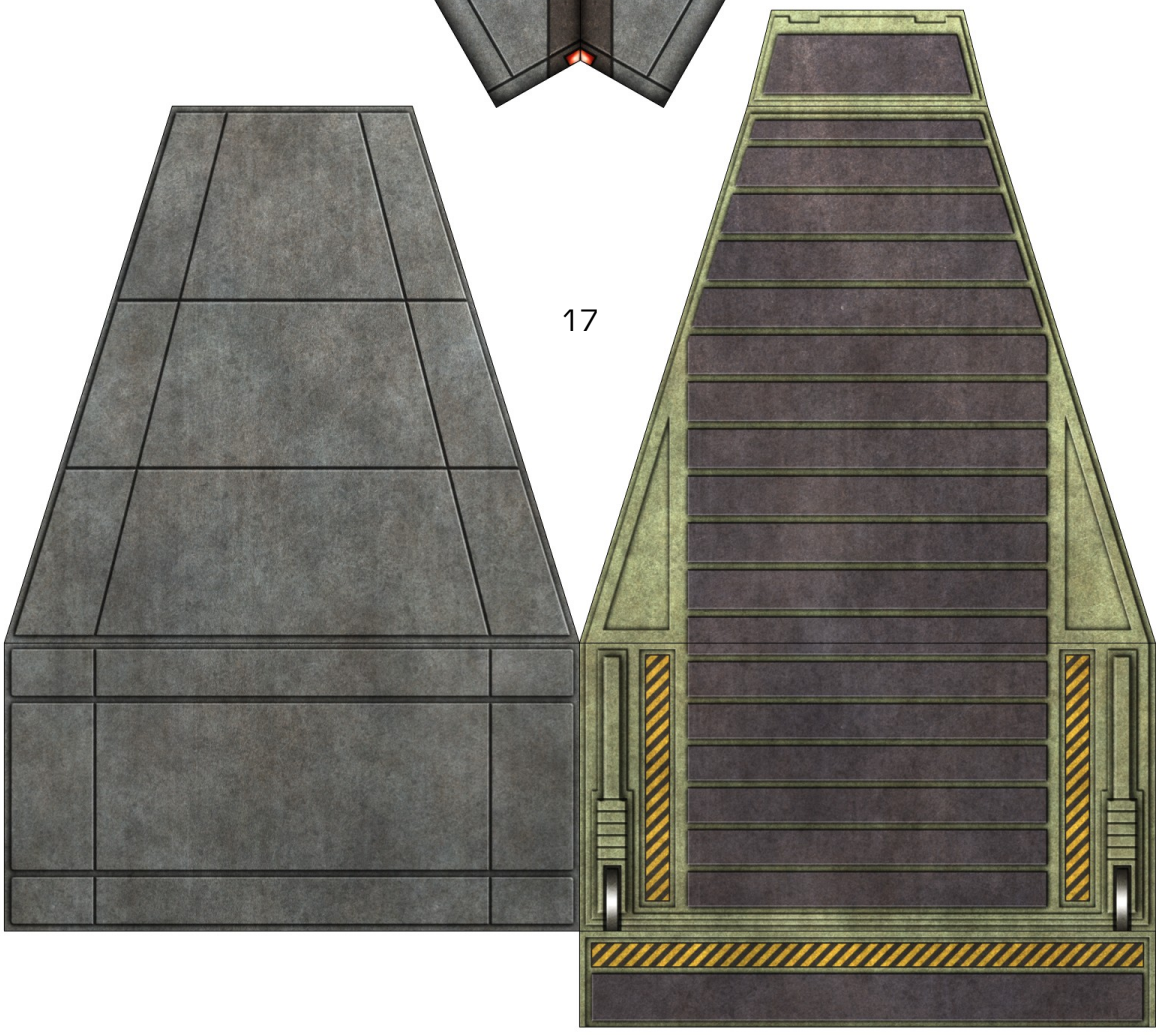

©2009-2010 Christopher Roe/Ebbles Miniatures. All rights reserved. Permission granted to photocopy for personal, non-commercial use only.

18

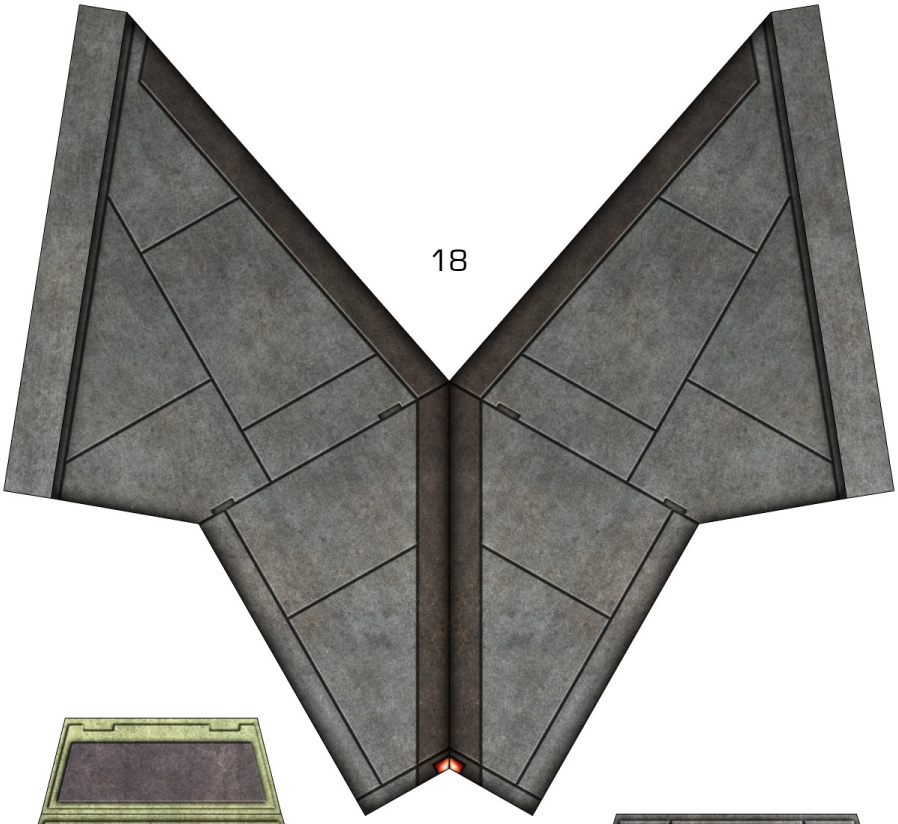

17

