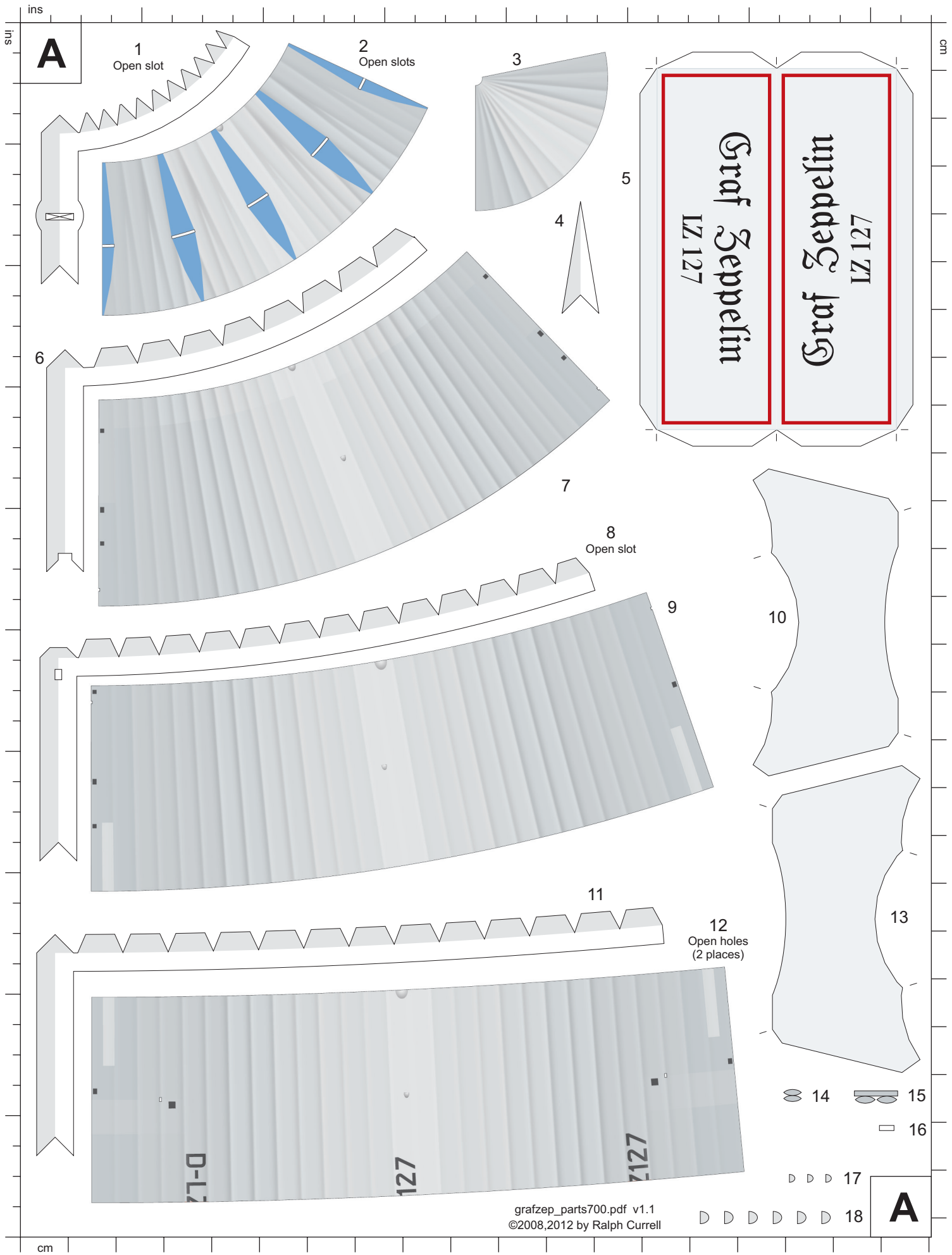
ins
cm
A
1
Open slot
2
Open slots
3
4
5
Graf Zeppelin
LZ 127
Graf Zeppelin
LZ 127
6
7
8
Open slot
9
10
11
12
Open holes
(2 places)
13
14
15
16
17
18
A
grafzep_parts700.pdf v1.1
©2008,2012 by Ralph Currell

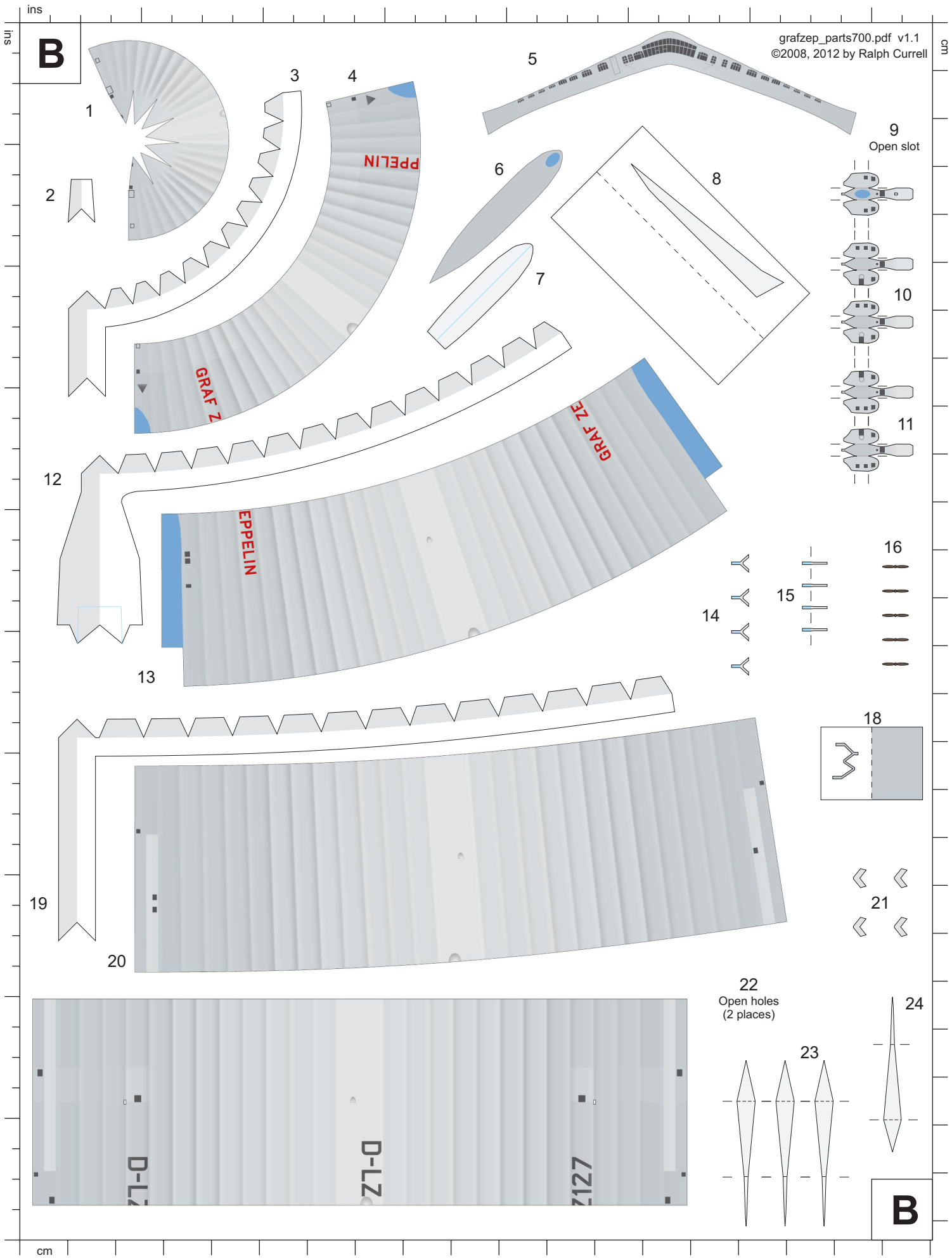
ins
cm
B
grafzep_parts700.pdf v1.1
©2008, 2012 by Ralph Currell
1
2
3
4
5
6
7
8
9
Open slot
10
11
12
13
14
15
16
18
19
20
21
22
Open holes
(2 places)
23
24
GRAF ZEPPELIN
B

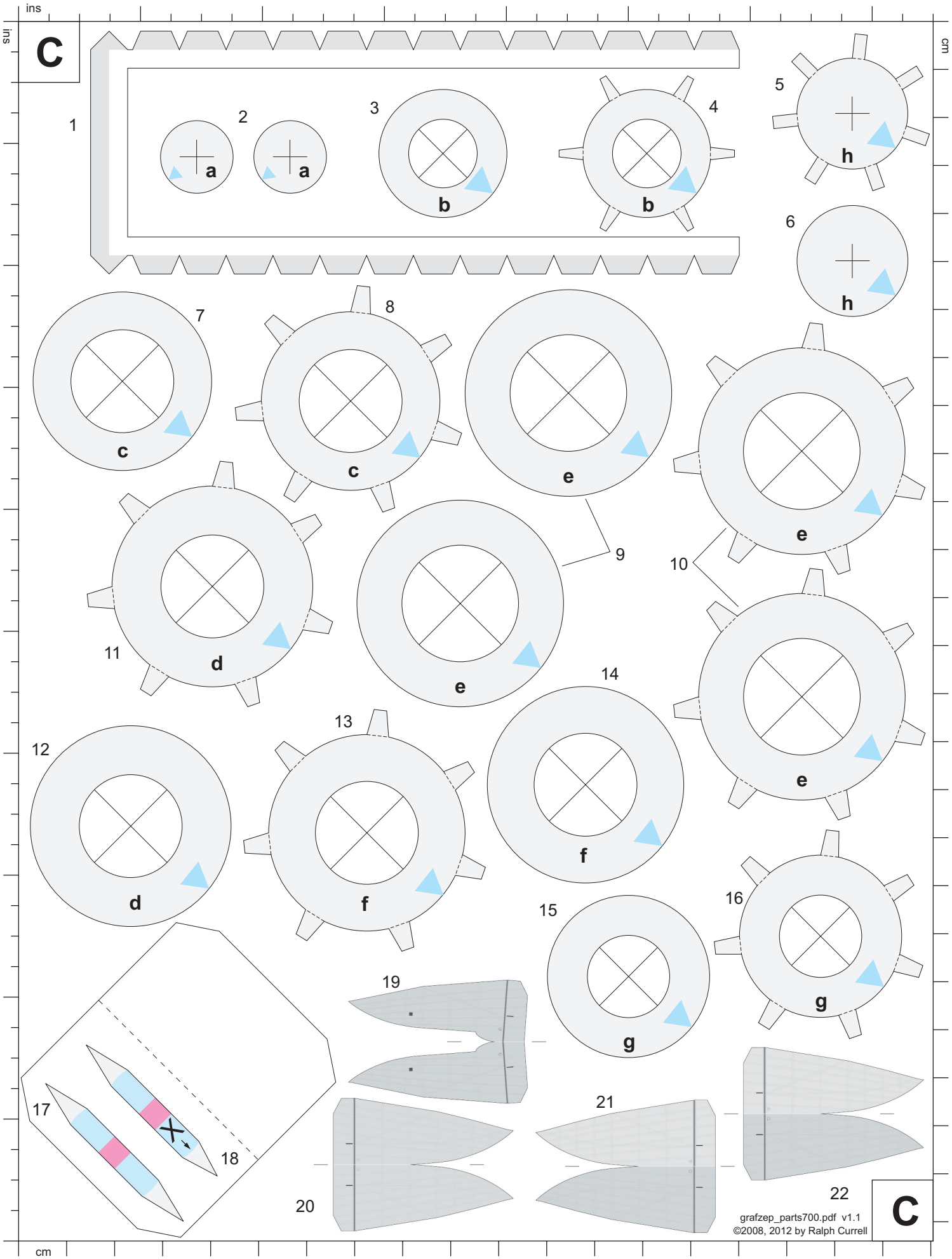
ins
ins
cm
C
1
2
a
a
3
b
4
b
5
h
6
h
7
c
8
c
e
9
10
e
11
d
e
12
d
13
f
14
f
e
15
g
16
g
17
18
19
20
21
22
C
grafzep_parts700.pdf v1.1
©2008, 2012 by Ralph Currell
cm