CURRELL GRAPHICS

Assembly Instructions for *Graf Zeppelin* (1:700 scale model)

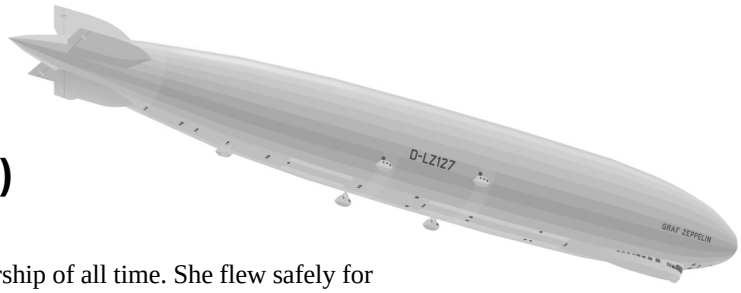

History

The German *Graf Zeppelin* was the most successful passenger airship of all time. She flew safely for almost 600 flights and travelled over one million miles during her nine-year career.

The LZ-127 was conceived in the aftermath of the First World War by the Zeppelin Company chief Hugo Eckener and engineer Ludwig Dürr. After years of lobbying and fundraising, the airship was completed at Friedrichshafen in 1928 and named for Graf (Count) Ferdinand von Zeppelin, the great German airship pioneer.

The ship's length of 237 metres and volume of 105,000 cubic metres made her the largest airship constructed up to that time. Maximum speed was 128 km/hr, with a normal cruise speed of 117 km/hr. The five 550-horsepower Maybach engines could use for fuel either gasoline or *Blau gas*, the latter weighing less and therefore allowing more useable lift. A long gondola located beneath the nose contained the flight controls; also located here were the radio room, galley, dining room and accommodations for the captain and 20 passengers. Approximately 40 crewmen were quartered further aft inside the hull. A ground crew of 200 or more was required to handle the huge ship on landing.

The maiden flight took place on September 18, 1928 and in October, with Eckener in command, the airship made her first transatlantic voyage to Lakehurst, New Jersey. An attempted second journey to the USA nearly ended in disaster when four of the ship's five engines failed, and Eckener was barely able to make an emergency landing in France. In August 1929, in an audacious bid for publicity, the *Graf Zeppelin* embarked on a round-the-world journey. Beginning in New Jersey, the ship travelled east around the globe, arriving at her starting point 21 days later. Another notable flight was made in July 1931 when the *Graf Zeppelin* voyaged to the Arctic, conducting scientific experiments and carrying a large quantity of mail.

In 1930 the first regular transatlantic airship service was begun. Most flights were between Germany and Brazil, with occasional visits to the United States. After the Nazi party came to power in Germany, and against Eckener's wishes, the swastika emblem was painted on the vertical stabilizers. The success of the airship encouraged the Zeppelin Company to construct two new and larger passenger ships. The first, *Hindenburg*, entered service in 1936 and the second was to be named *Graf Zeppelin*, replacing the existing *Graf*.

The destruction by fire of the *Hindenburg* in 1937 put an end to these plans. Public confidence in airship travel was shattered, and the *Graf Zeppelin* was retired a month later. Being of little military use, she was ordered scrapped in 1940 and the aluminum framework re-used for Germany's war industry. Today only an engine car and a few other fragments exist in museums as a reminder of the mighty airship.

The Model

This model builds into a 1:700 scale replica of Graf Zeppelin as she appeared during her 1929 round-the-world flight. A word of caution: the model is not suitable for assembly by young children, due to the use of sharp tools and the complexity of some assembly steps. Previous experience with card modeling is recommended. If you have any comments or suggestions regarding this kit, I can be reached by e-mail at models@currell.net

Model parts are contained in the document **grafzep_parts700.pdf**. Print out the parts document on 8.5"x11" or A4 size white card stock suitable to your printer. 67 lb. cover stock (approximately 8.5 thousandths of an inch or 0,2 mm thick) is recommended.

Tools

Before beginning, you will need the following tools and materials:

a) white glue
b) a glue applicator such as wooden toothpicks or a small paintbrush
c) scissors (optional)
d) a sharp knife for cutting
e) a flat cutting surface
f) a ruler or straight edge
g) a scoring tool or blunt knife for creasing the fold lines

Hints

a) Select a well-lit, comfortable work area that will remain undisturbed when you are not there.
b) Keep your hands and tools clean when working, to avoid getting glue on visible parts of the model.
c) It's easier to stay organized if you only cut out those parts you need for each step.
d) Make sure your knife is sharp. When cutting straight lines, use a straight-edge. Scissors, if used carefully, can be used for large curved parts.
e) Study the diagrams carefully, and always test-fit the parts before applying glue.
f) You may wish to colour the edges of the parts to make seams less visible. Pencil crayon or paint applied with a fine brush can be used (experiment on scrap pieces to see what works best).

Assembly

In these instructions, the directional terms are given assuming the model is horizontal (fins at back). 'Port' and 'starboard' refer to left and right sides respectively. Scoring of parts is indicated by thin black lines outside the part's outline or by dashed lines on the part's surface. Score parts *before* cutting them out. In the diagrams, subassemblies are identified by a number within a circle (e.g. ②), corresponding to the step in which it was assembled.

Assemble the body segments (**steps 1-6**). A typical body segment assembly is shown in **step 1**. It comprises an outer surface (the 'skin' of the airship), a connecting strip and an internal former to provide strength and maintain the segment's shape. To construct an assembly, carefully cut out the parts and glue the connecting strip to the inside of the surface segment. This strip must be lined up so that the shaded areas protrude beyond the edge of the surface part (see the diagrams). The segment is then curved so the edges butt together and are held by the connecting strip. The internal former is made of two pieces which are glued back-to-back. Blue locating arrows are printed on the former pieces; the arrow tips should line up. Glue the former ring inside the segment's connecting strip ensuring the former does not protrude into the notched part of the strip. When joining the completed segments to each other, ensure the longitudinal seams line up.

In **step 2** the fin spars C17 and C18 are glued into the slots cut into the outer surface. The 'X' marking printed on C18 indicates the body seam (this fin is smaller than the others). Form the nose segment (**step 7**) by assembling the surface and connecting strip, then gluing the 'leaves' together to form the rounded front.

Assemble the display stand (**step 8**). This will allow you to set the airship down while adding the smaller assemblies in the following steps.

Assemble the stabilizer fins (**step 9**). Glue the former to the inside of the fin as shown, then fold the fin surface and glue together the outer edges. The control horns B21 slide through the slots cut in the fins. Attach to the tail of the airship, using the blue printed shapes and protruding spars for alignment. Optionally, attach the gas vent hoods to the top of the airship body (**step 10**) using the printed marks on the surface for location.

Assemble the control gondola's inner structure (**step 11**) then attach the outer surface B5. This outer surface is almost vertical at the front, and gradually bends to almost horizontal at the rear end (see diagram). Attach the gondola to the blue printed shape on the bottom of the airship body (**step 12**).

Step 13 shows the assembly of a typical engine car. Because the car is open at the back, the inner surface should be coloured black or grey. Attach the support strut B18 to the rear engine car (**step 14**), then form the bumper bag A14 into a half-spherical shape and glue to the bottom of the car. Glue together the struts for the side engines (**step 15**) and attach to the engine cars as shown. Note that the port and starboard cars differ only in their printed markings. To avoid confusion, you may wish to assemble one car and attach it to the airship before beginning the next car. Attach the cars to the airship body as shown in **step 16**, with the narrow (open) end at the rear. Form the forward bumper bag as shown in **step 17** and glue to the underside of the control gondola. Finally, attach the propellers (**step 18**) to the rear of the engine cars. The non-printed side of the propeller blades should be painted or inked to match the printed side.

1 Typical body segment

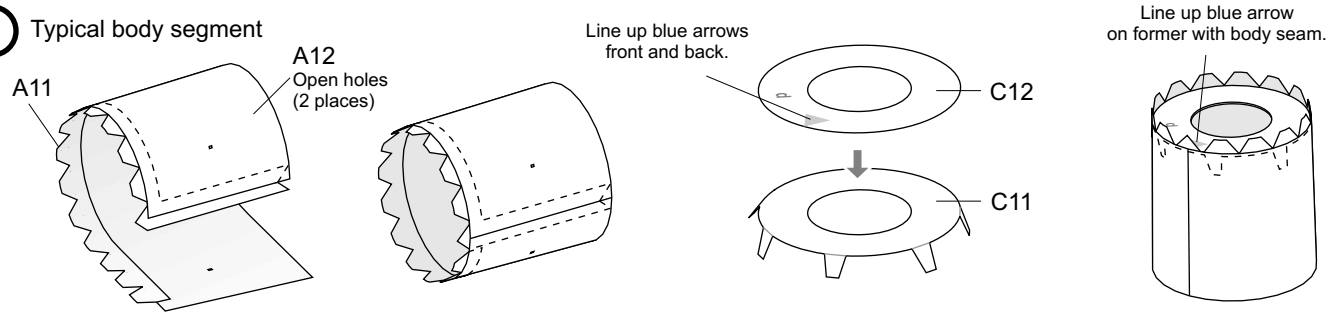

2 Fin segment

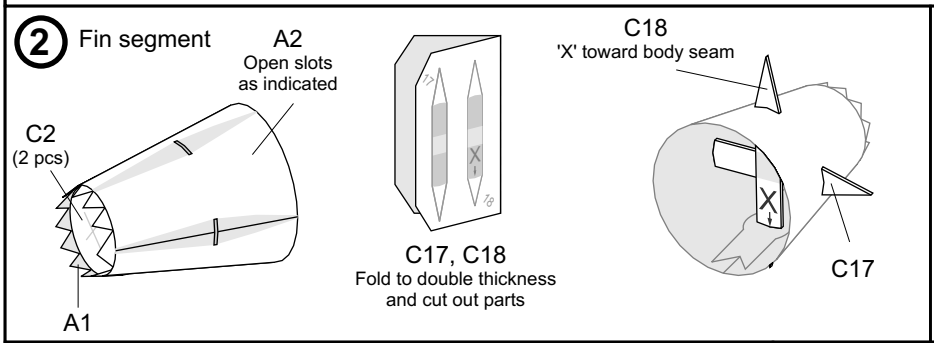

3 Tail segment

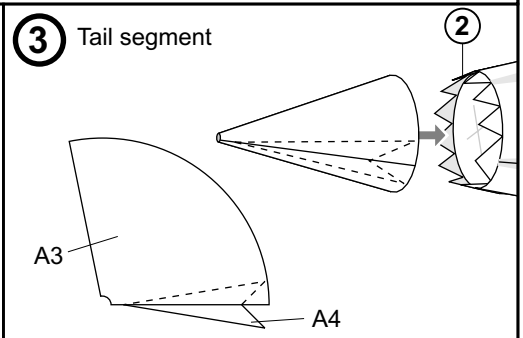

4 Rear body segments

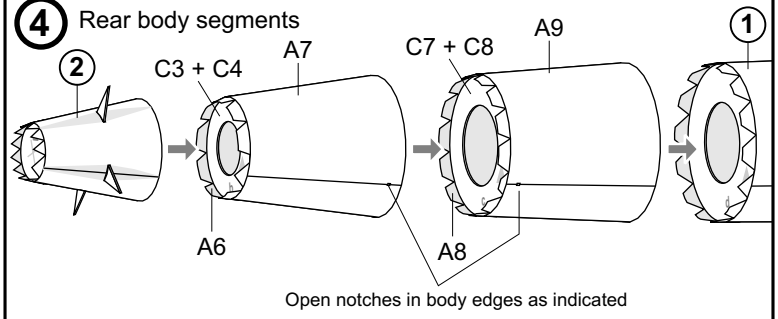

5 Centre segment

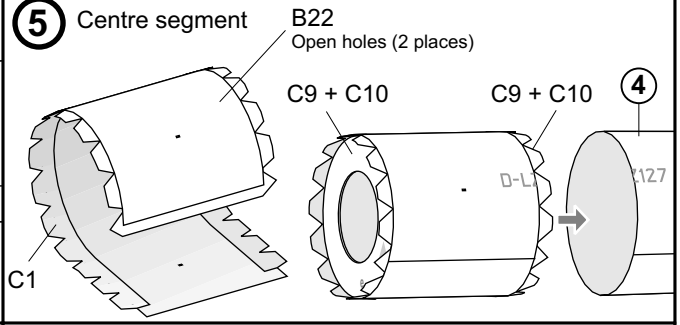

6 Front body segments

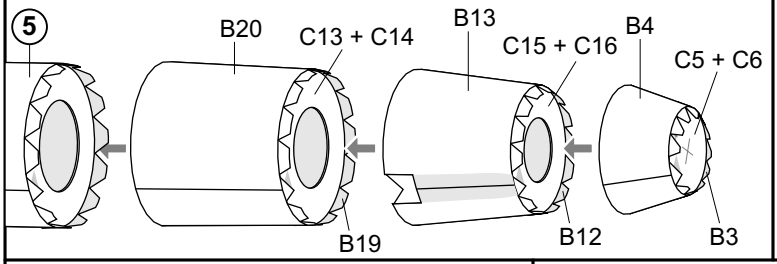

7 Nose segment

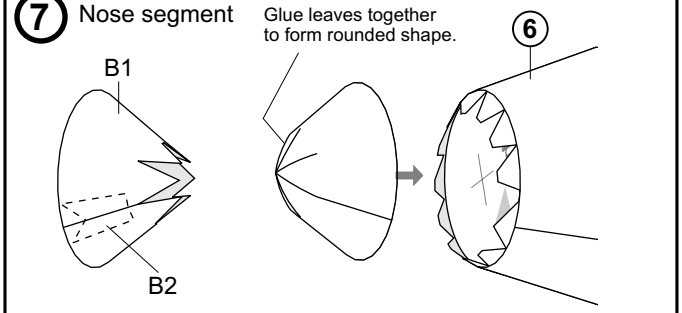

8 Display stand

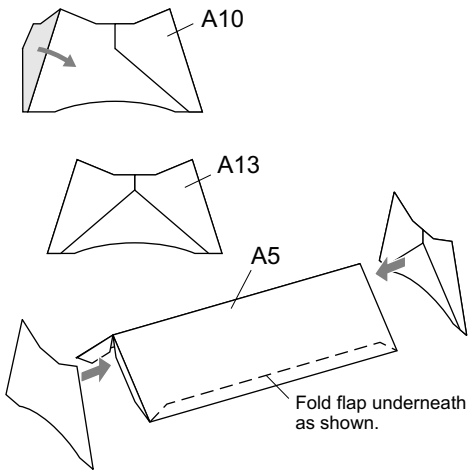

9 Stabilizers

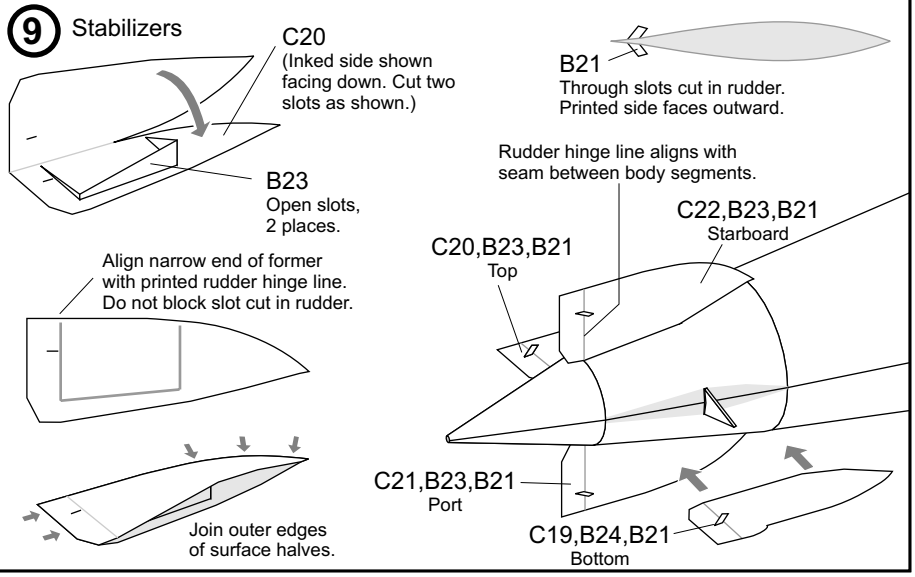

10 Optional: Vent hoods

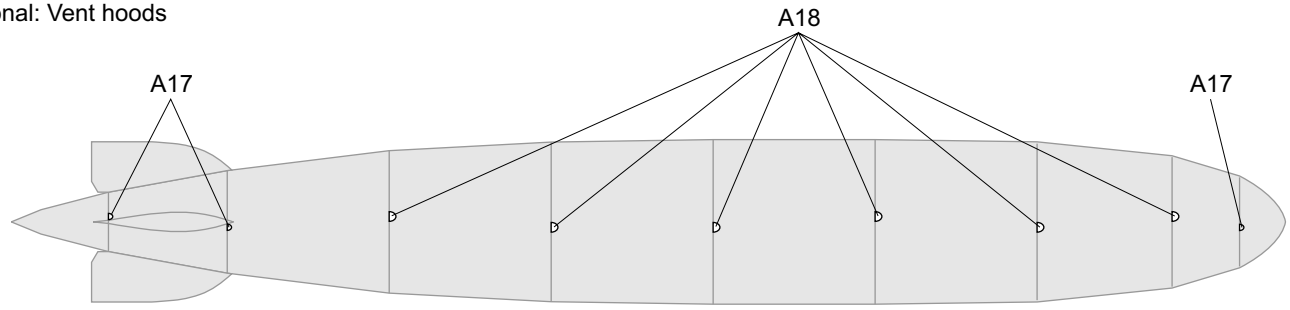

Top view.

11 Control gondola

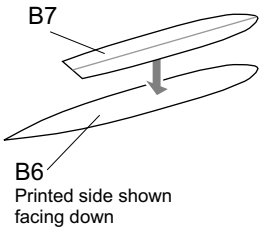

Printed side shown facing down

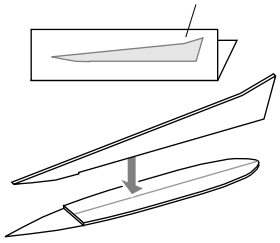

Fold to double thickness and cut out shape.

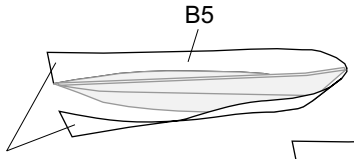

Rear ends of B5 are twisted to lie almost flat

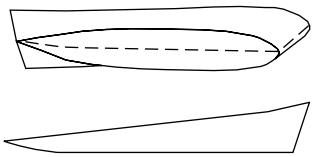

Side view

12 Attach gondola to body

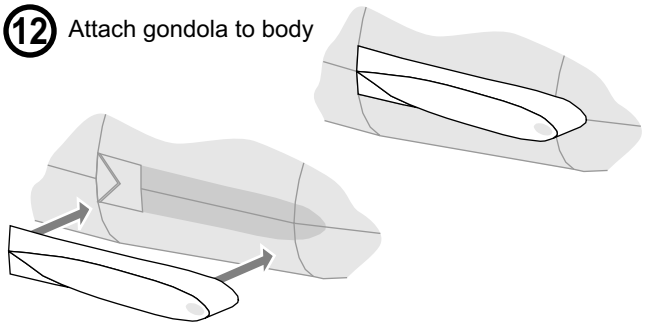

13 Engine car (5 pieces)

B9 (rear, 1 piece)
B10 (starboard, 2 pieces)
B11 (port, 2 pieces)

Non-printed side: Colour shaded area black or grey.

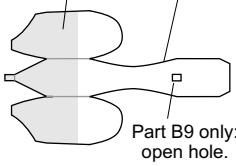

Part B9 only: open hole.

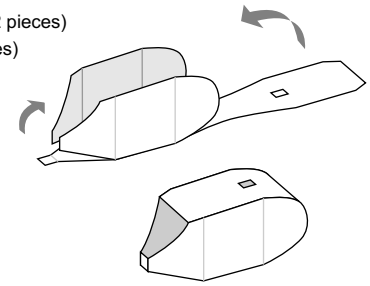

14 Rear engine





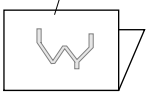

Fold to double thickness and cut out shape.

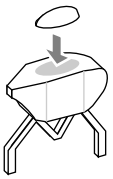

15 Side engines (4 assemblies)

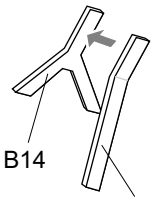

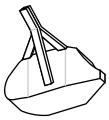

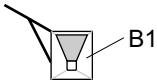

Starboard engines (2 assemblies)



Port engines (2 assemblies)

16 Attach engines to body

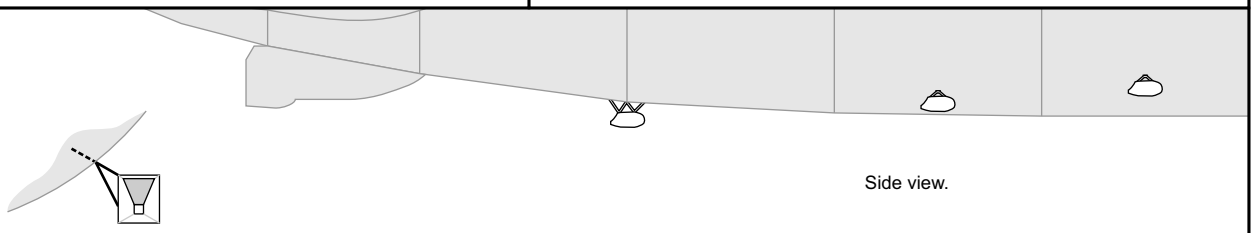

Side view.

17 Gondola bumper bag

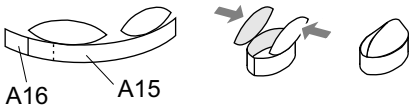

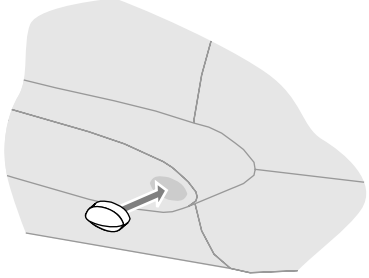

18 Attach propellers

Use brown paint or ink to colour non-printed side of propellers.

