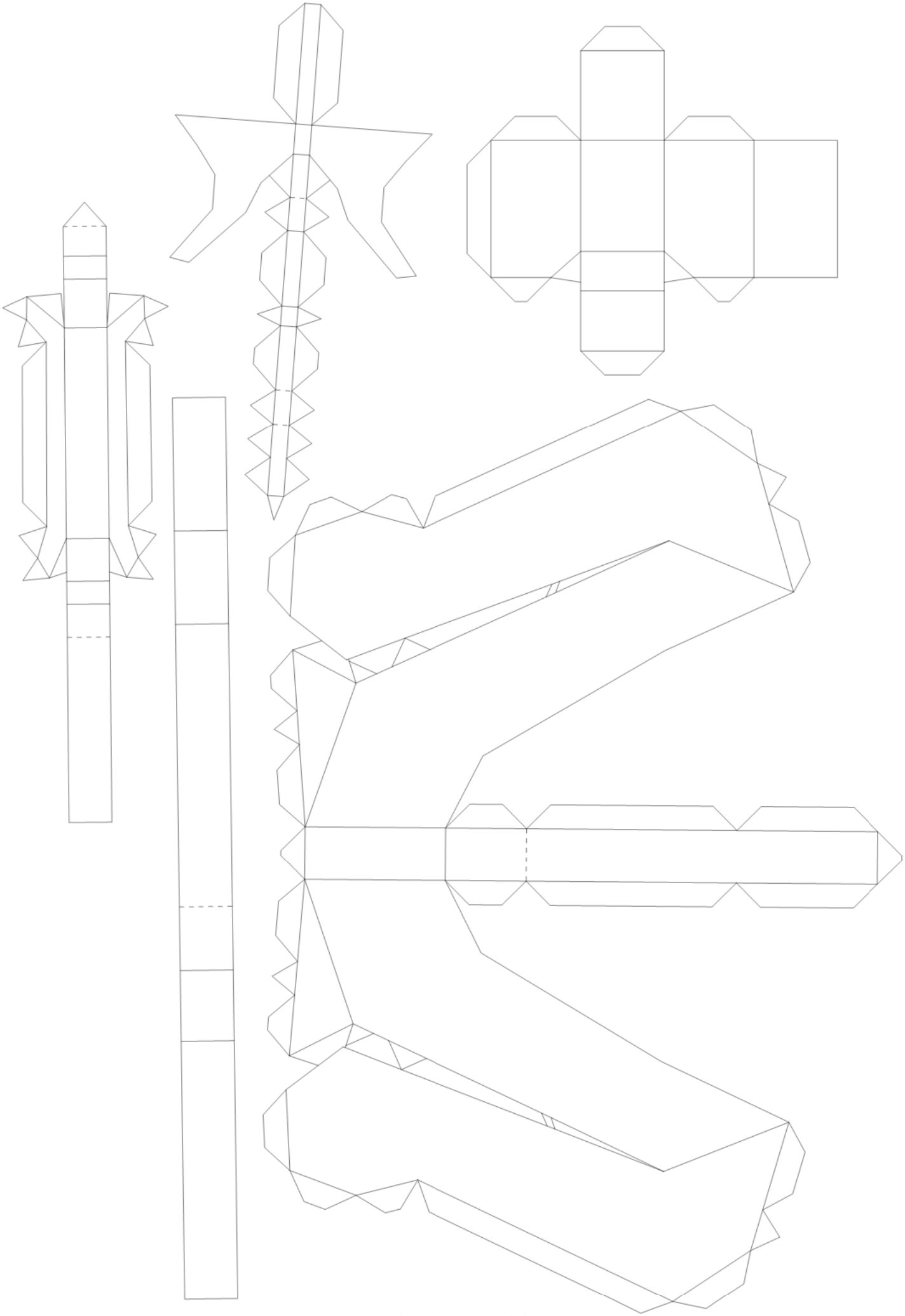

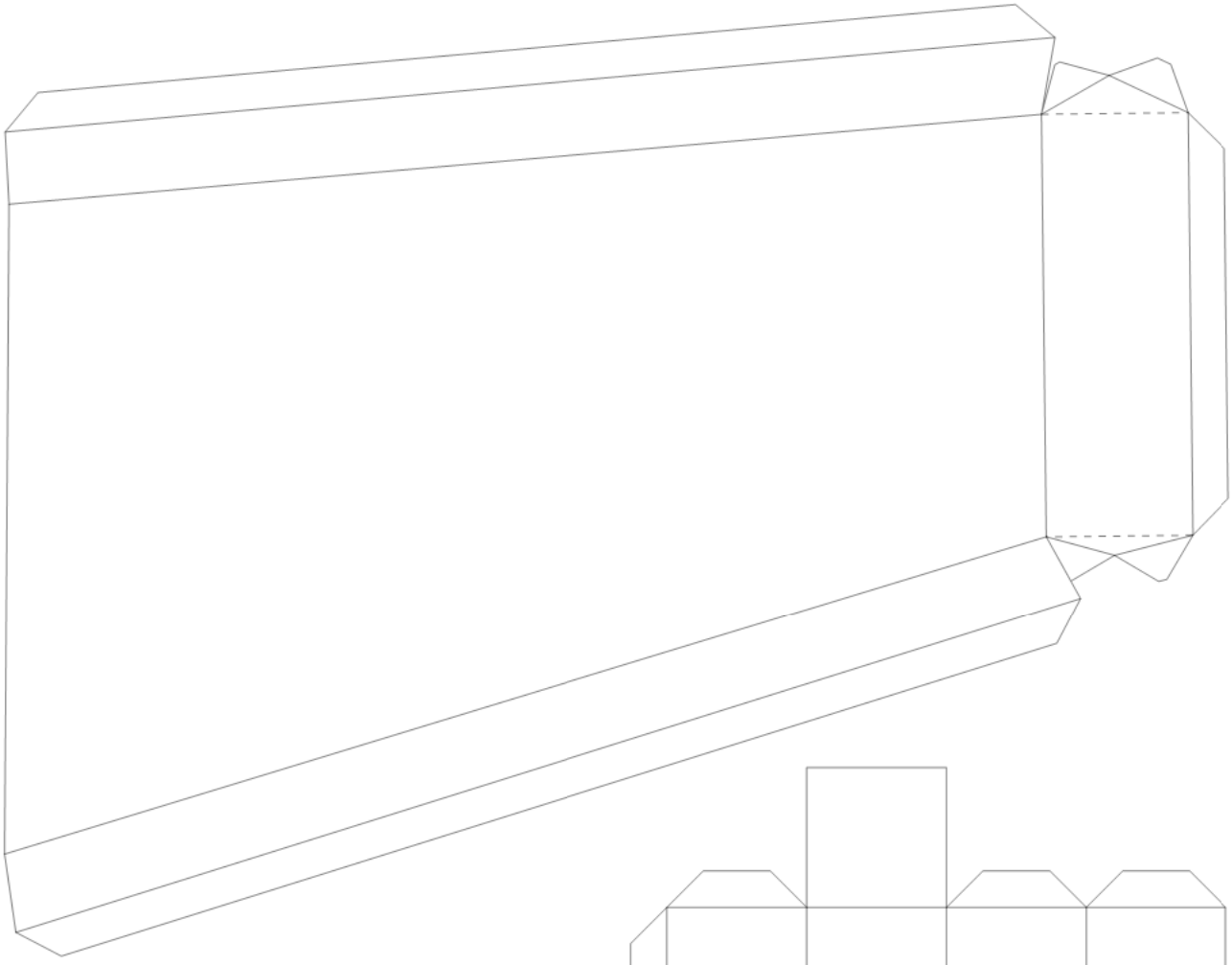

Stock

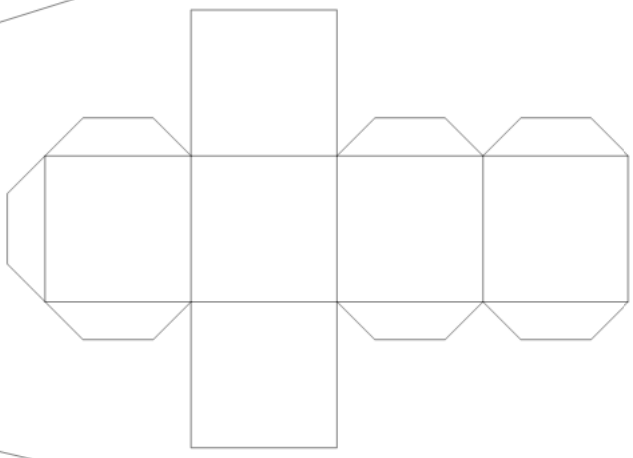

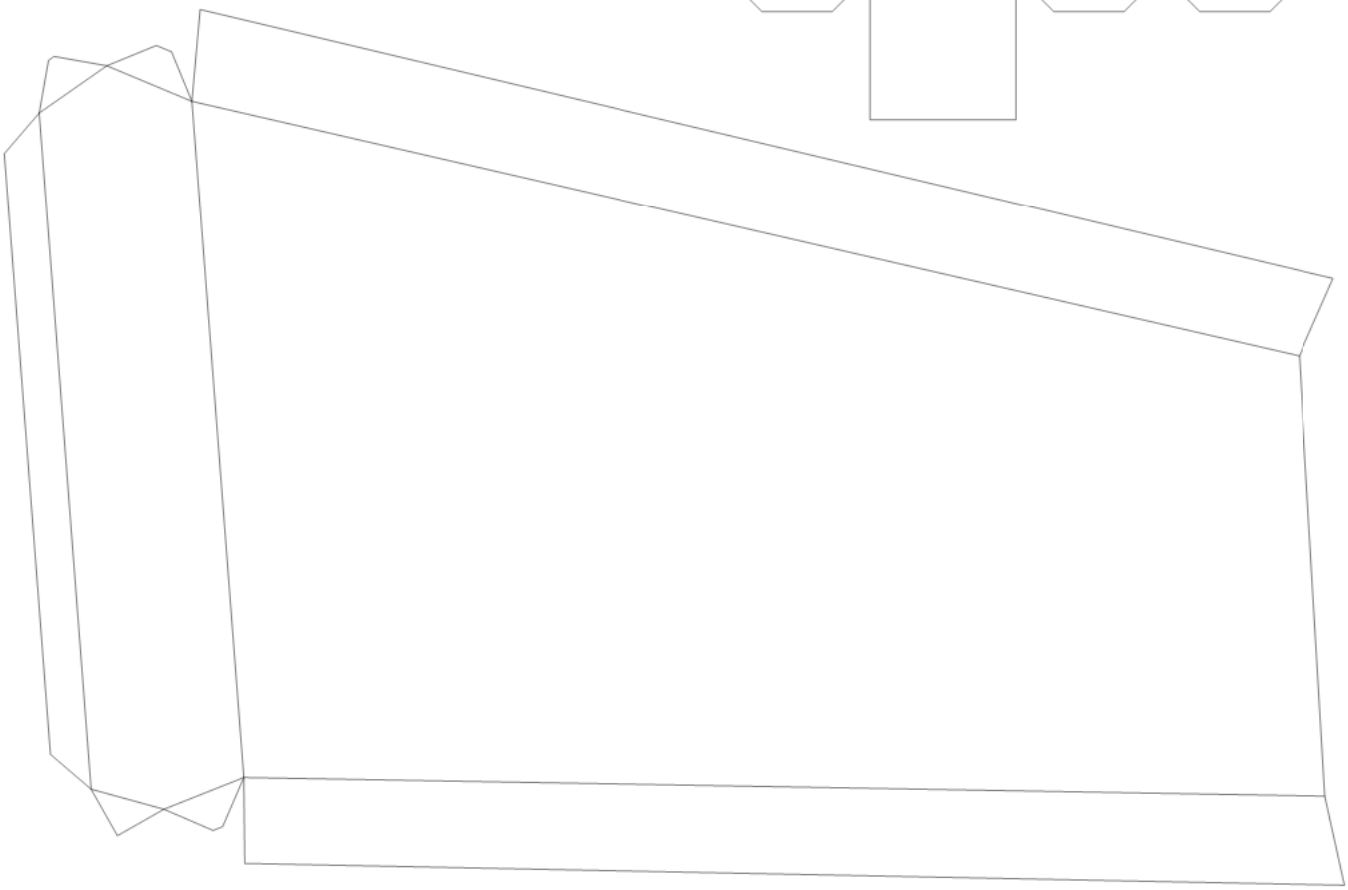

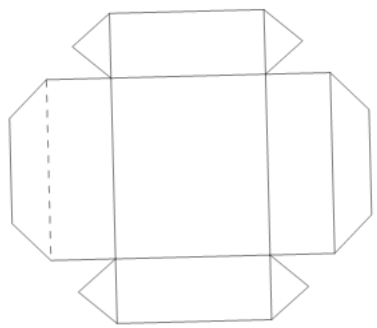

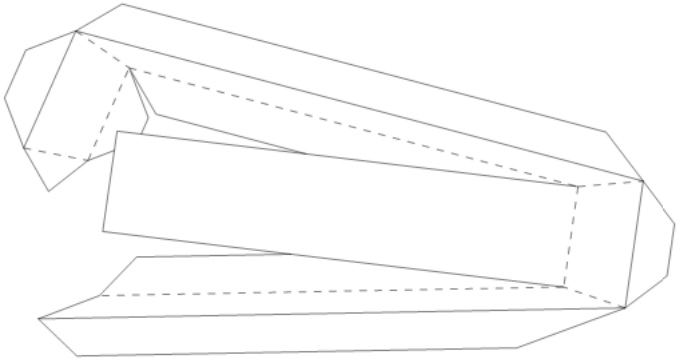

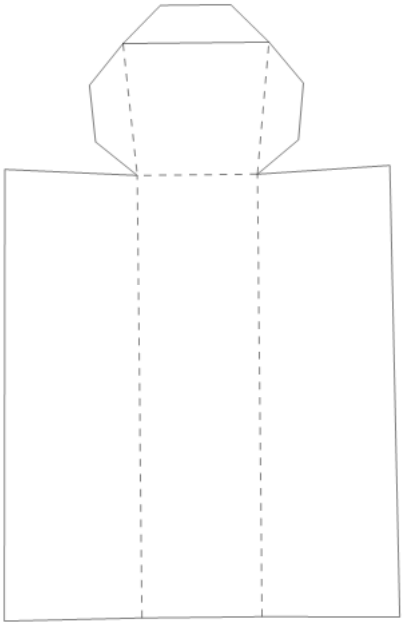

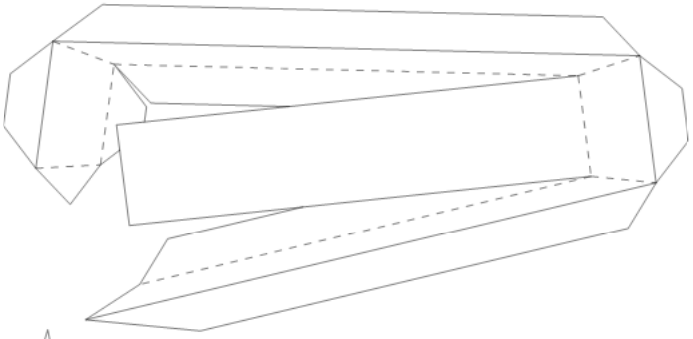

Main

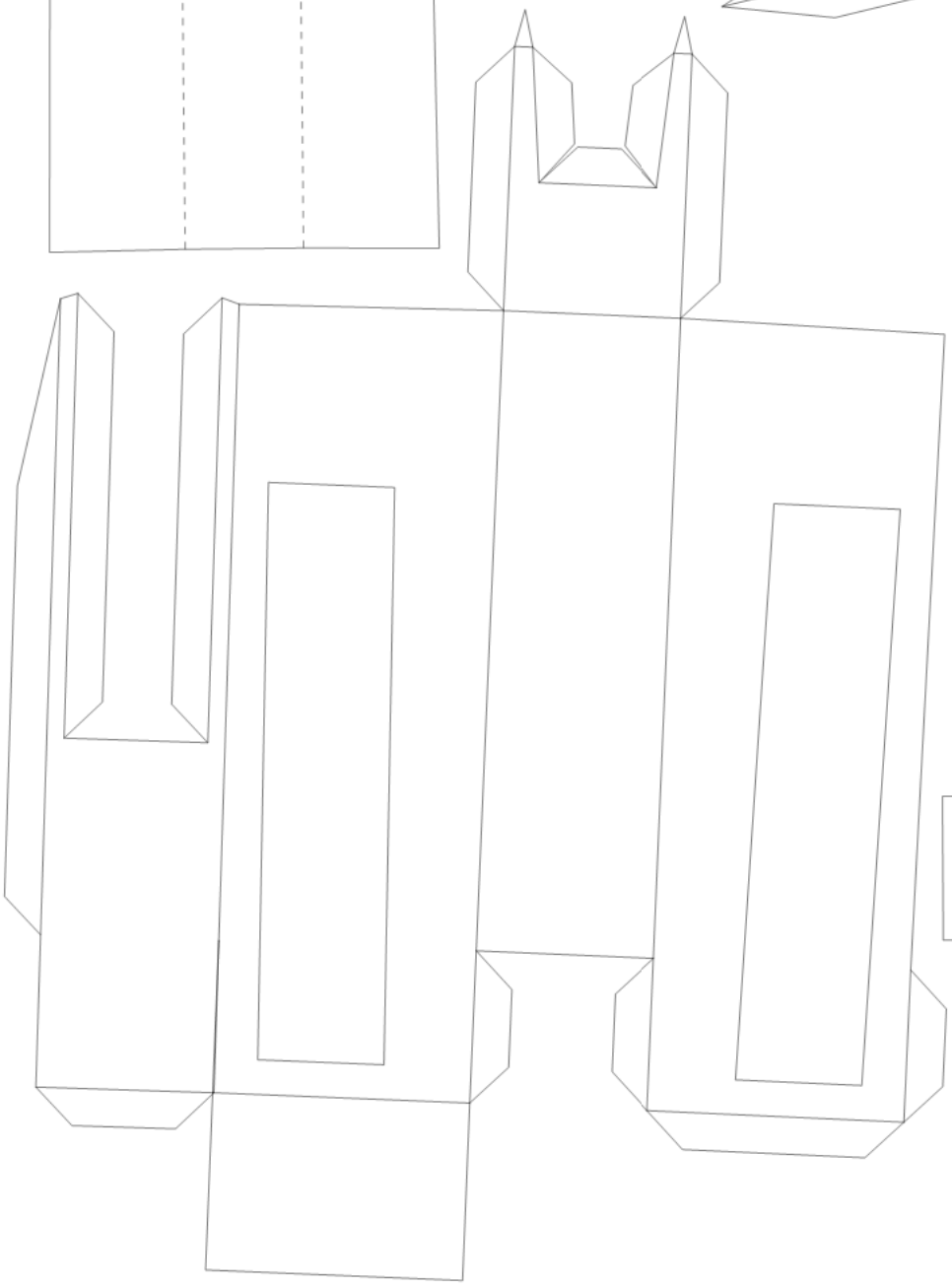

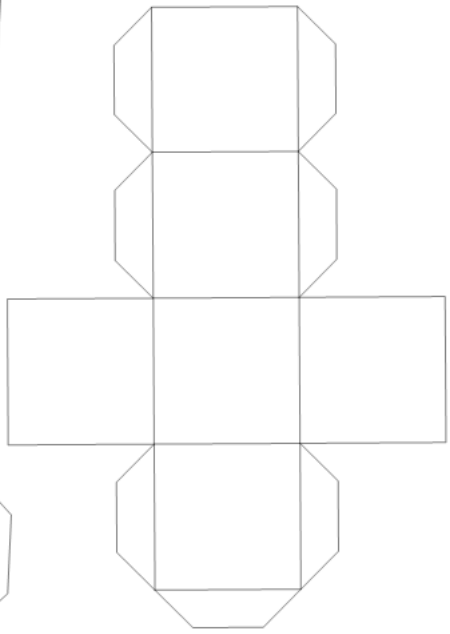

3/10 (row1 col3)

Main

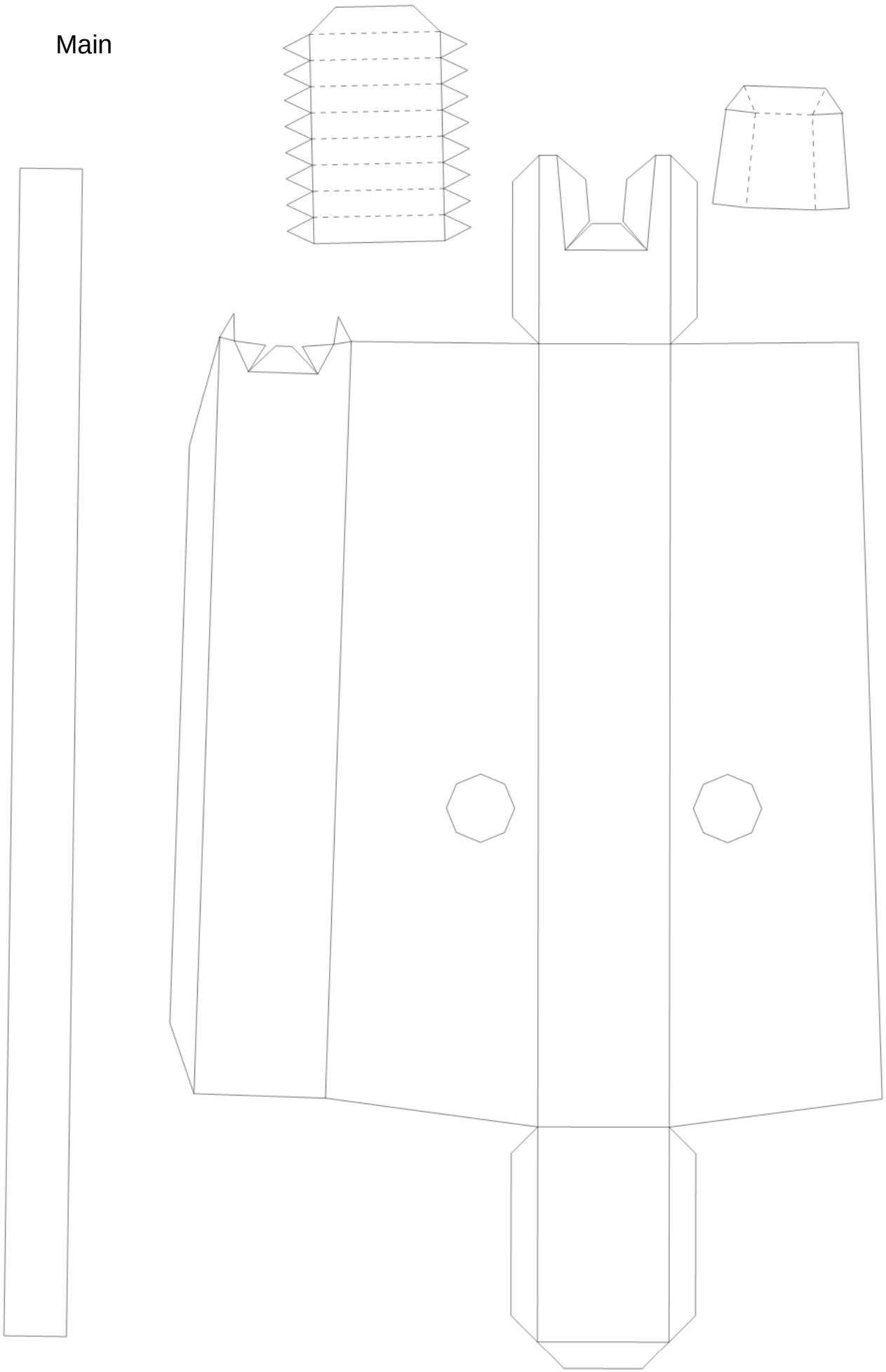


Mag



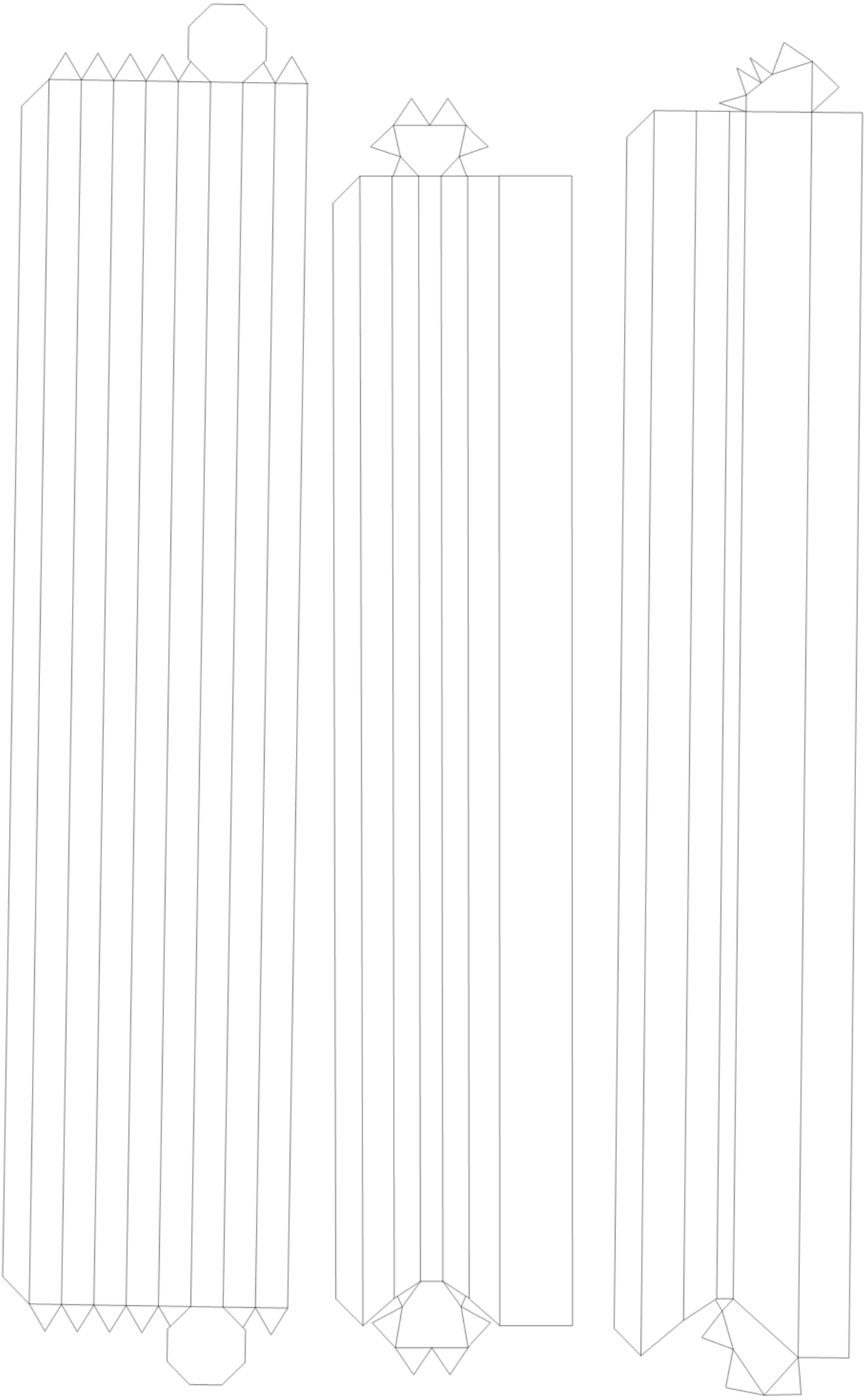

6/10 (row2 col1)

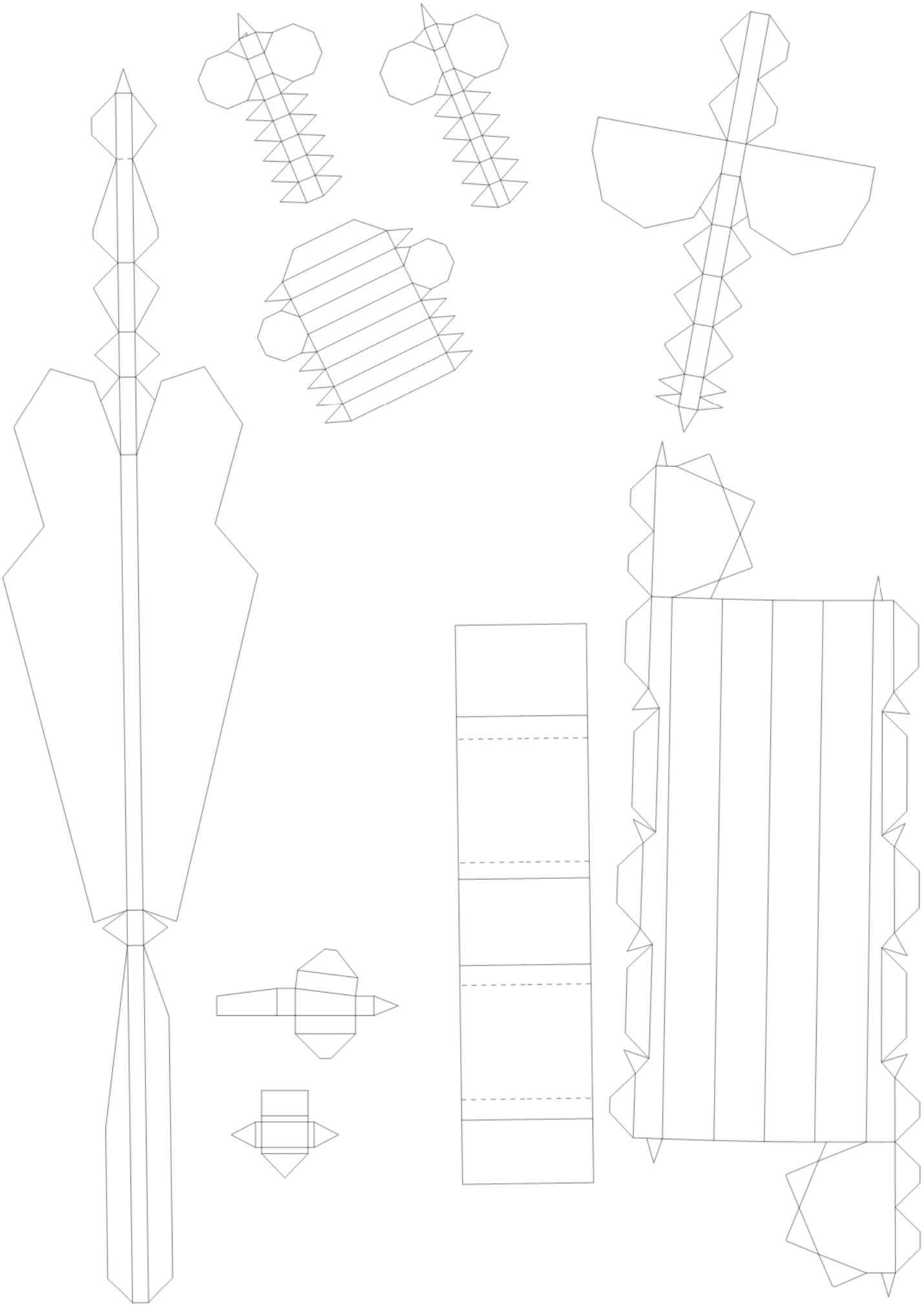

7/10 (row2 col2)

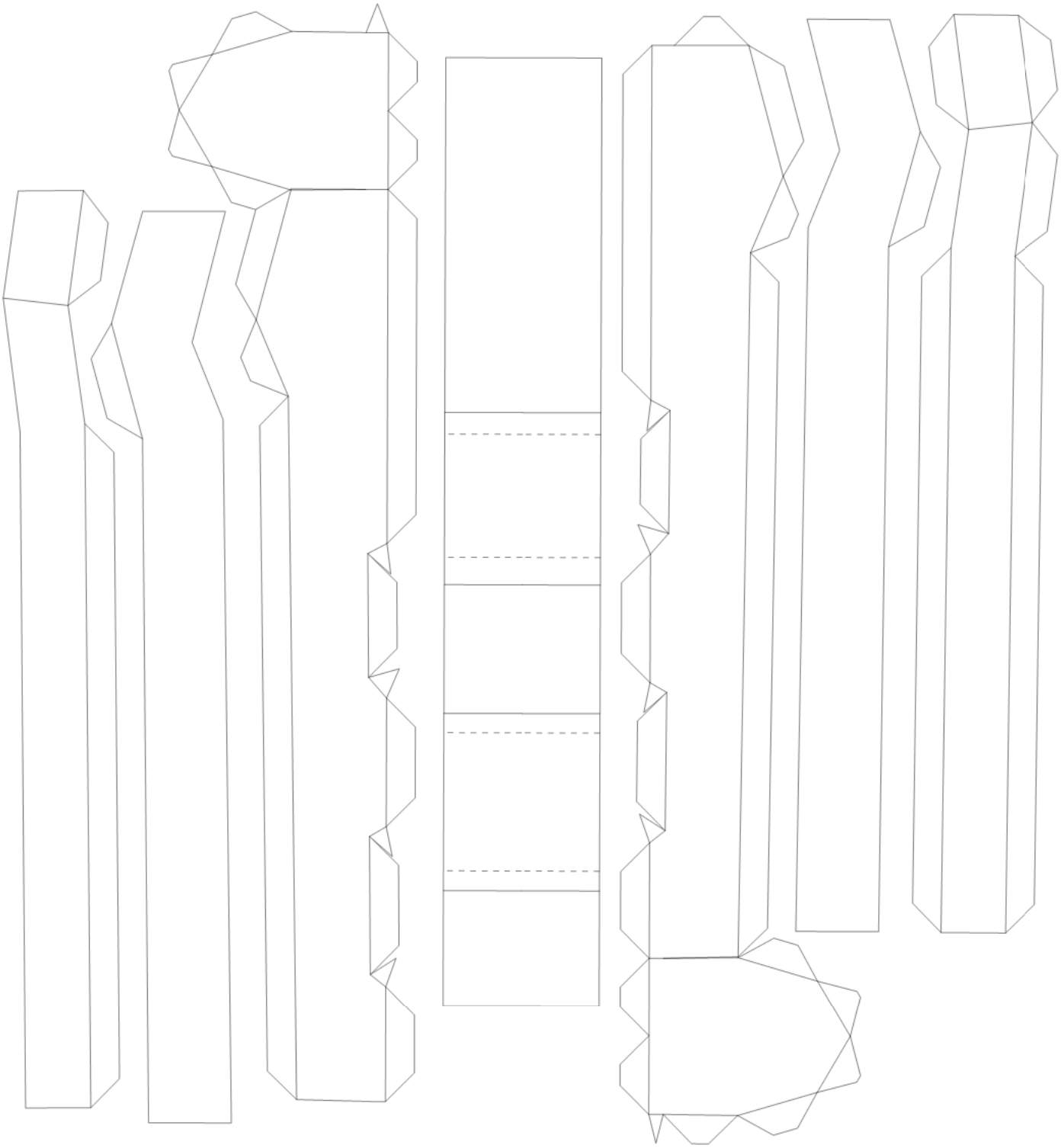

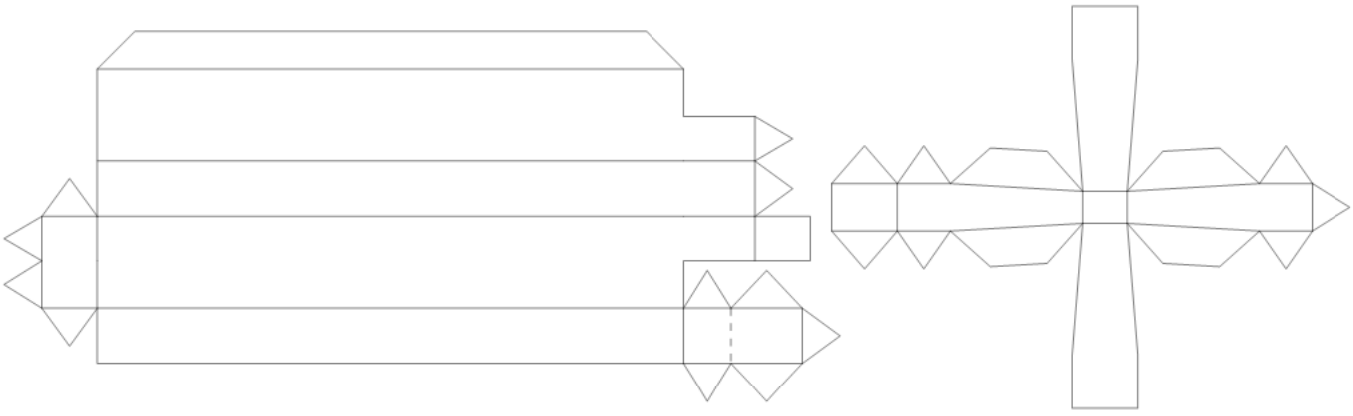

8/10 (row2 col3)

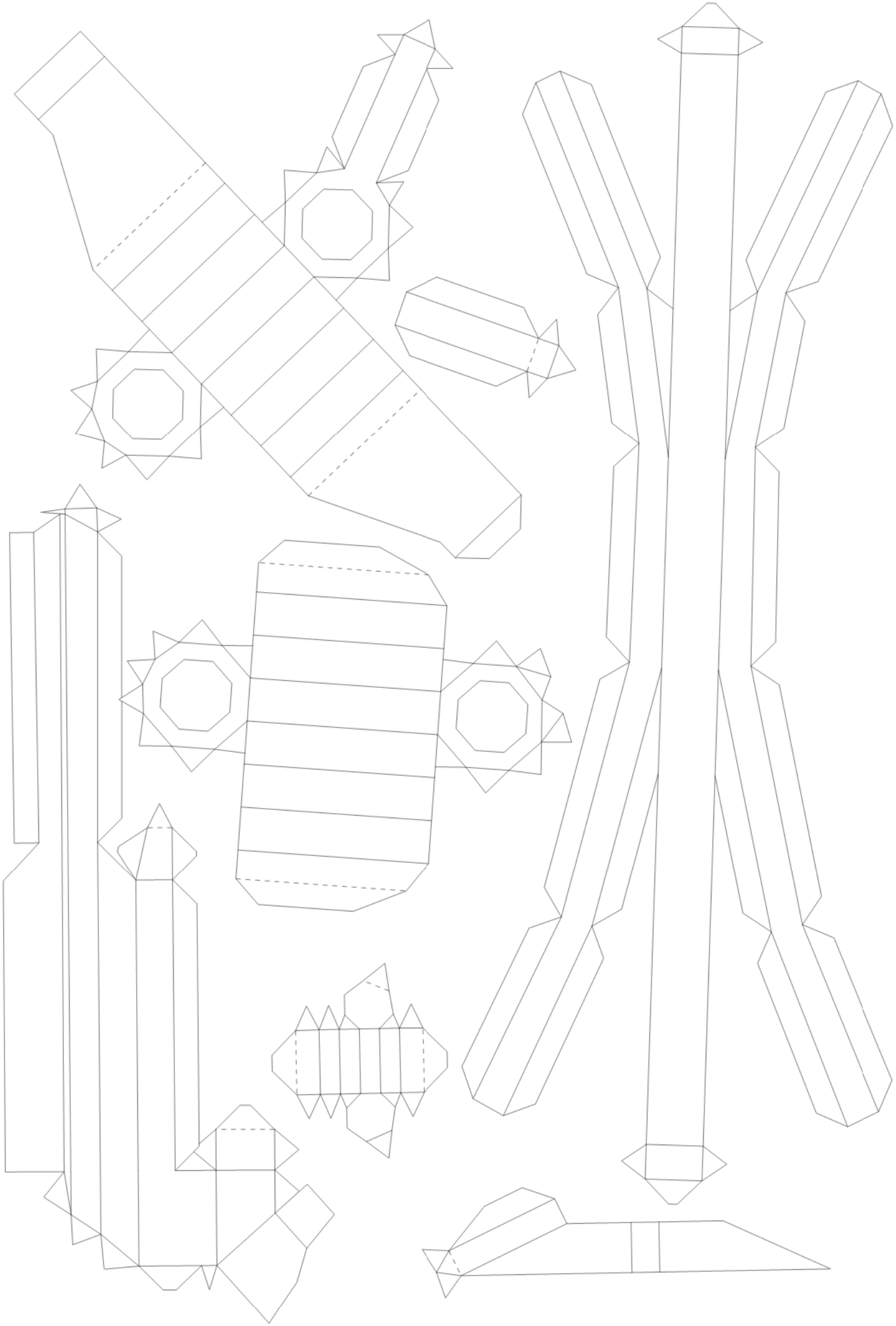

9/10 (row2 col4)

