LEGEND
Glue
Cutout - make a hole

Model : No. 0255/III/10



AC-130U Spooky Gunship

US. Air Force **Scale 1 : 100**

This AC-130U Spooky Gunship aircraft paper model is actually requested by many paper model builders couple years ago until now. Also the requests for a new livery for C-130 Hercules keep coming to me, so why not I take the challenge? I thought it was an easy task to re-color this model plane, but apparently it was not, as usual. I found out I had to re-model the vertical stabilizer and all the engines, I was not satisfy with the old ones. That's not all, I also remove all glue tabs and made separate inner glue tabs, so the assembled model will have smoother profile. First time I know this gunship was from a local aviation magazine, but that was not amazed me yet until I saw it in Tranformers the movie (TF1) and play as a Spectre gunner role in Call of Duty : Modern Warfare and in later Modern Warfare 3. As a bonus I added a display stand in this template, the scale is still the same, 1:100.

Assembly Instructions - click here
Petunjuk Perakitan

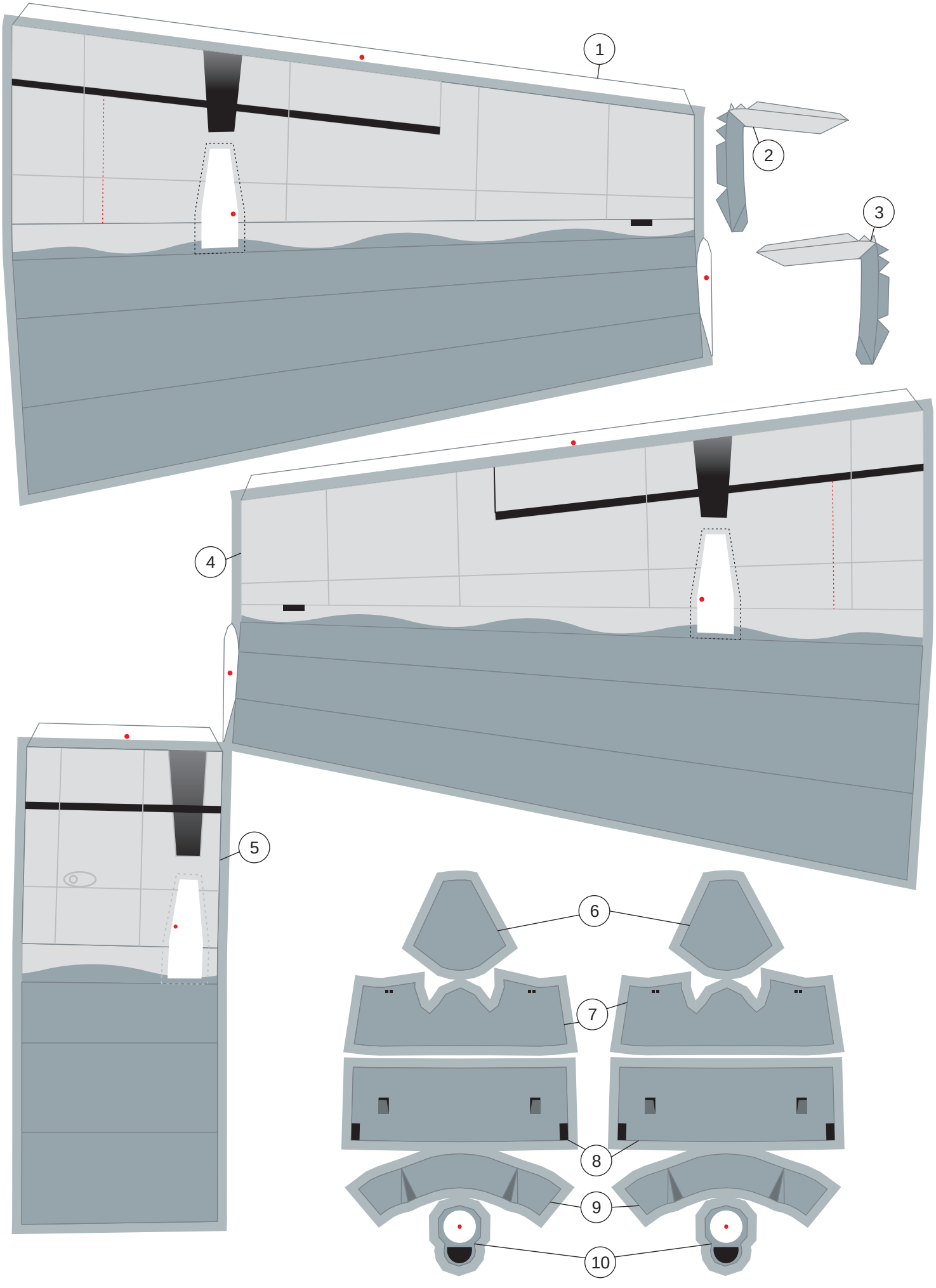
1
2
3
4
5
6
7
8
9
10

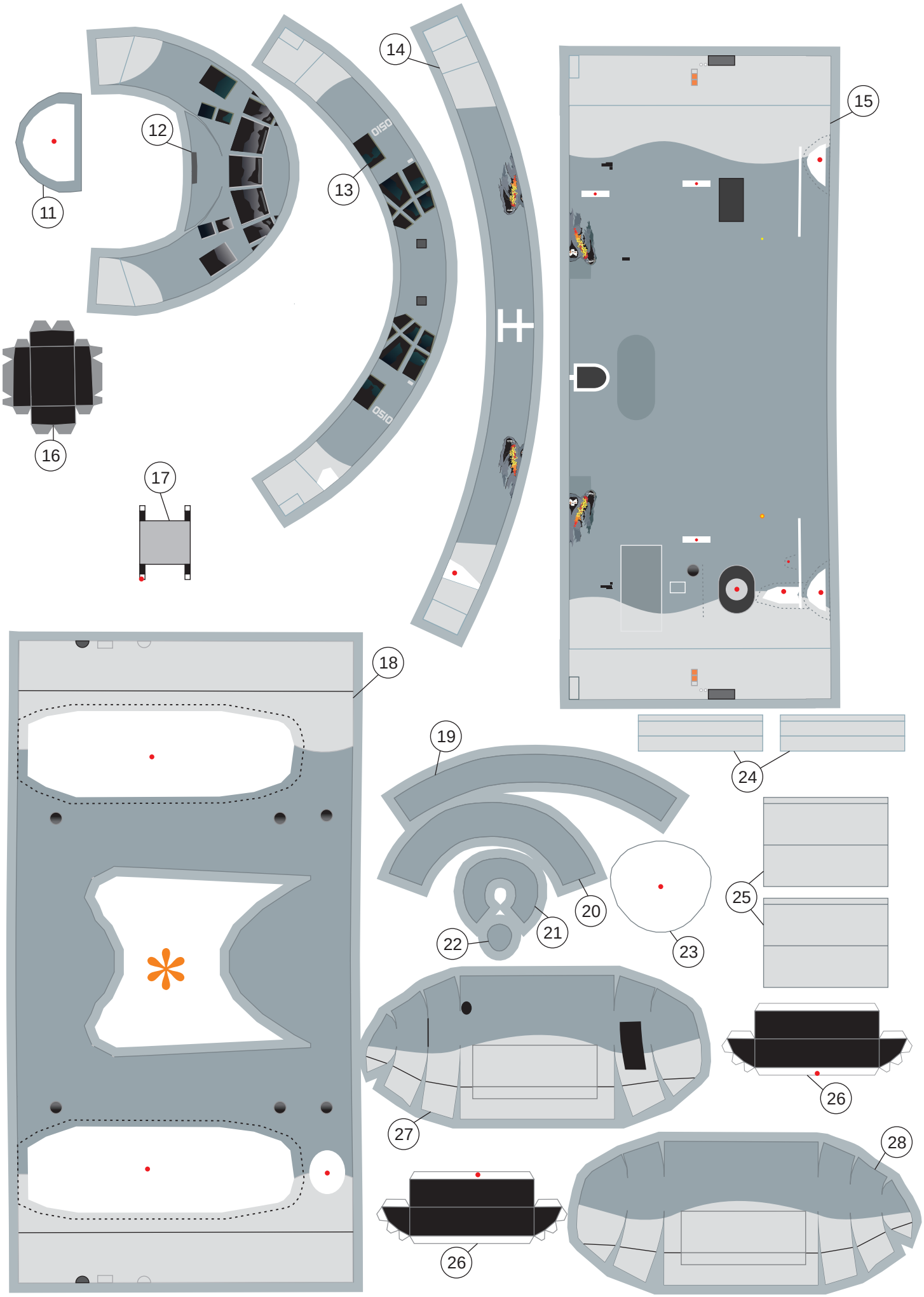
11
12
13
14
15
16
17
18
19
20
21
22
23
24
25
26
27
26
28

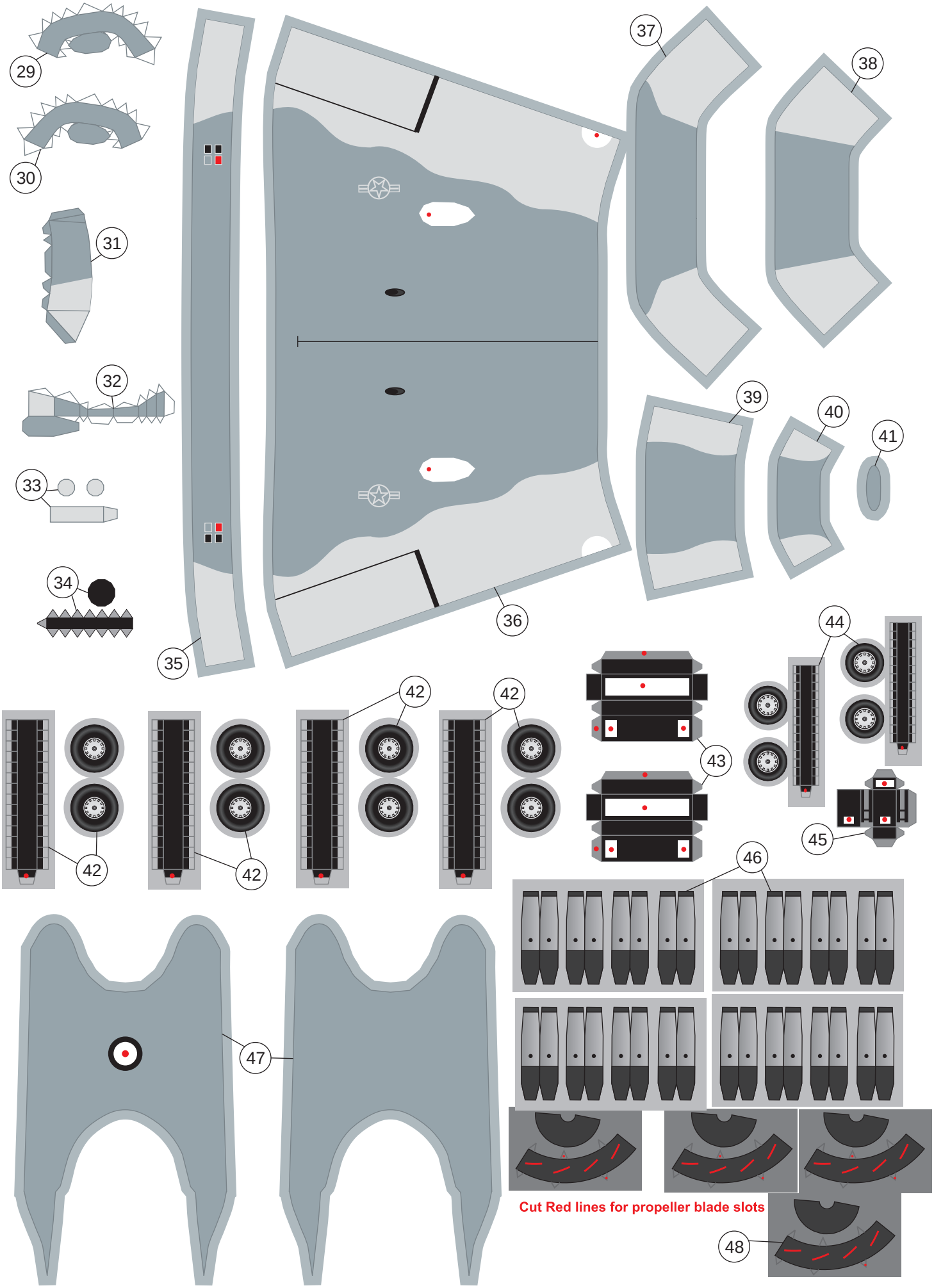
29
30
31
32
33
34
35
36
37
38
39
40
41
42
42
42
42
43
44
45
46
47
48
Cut Red lines for propeller blade slots

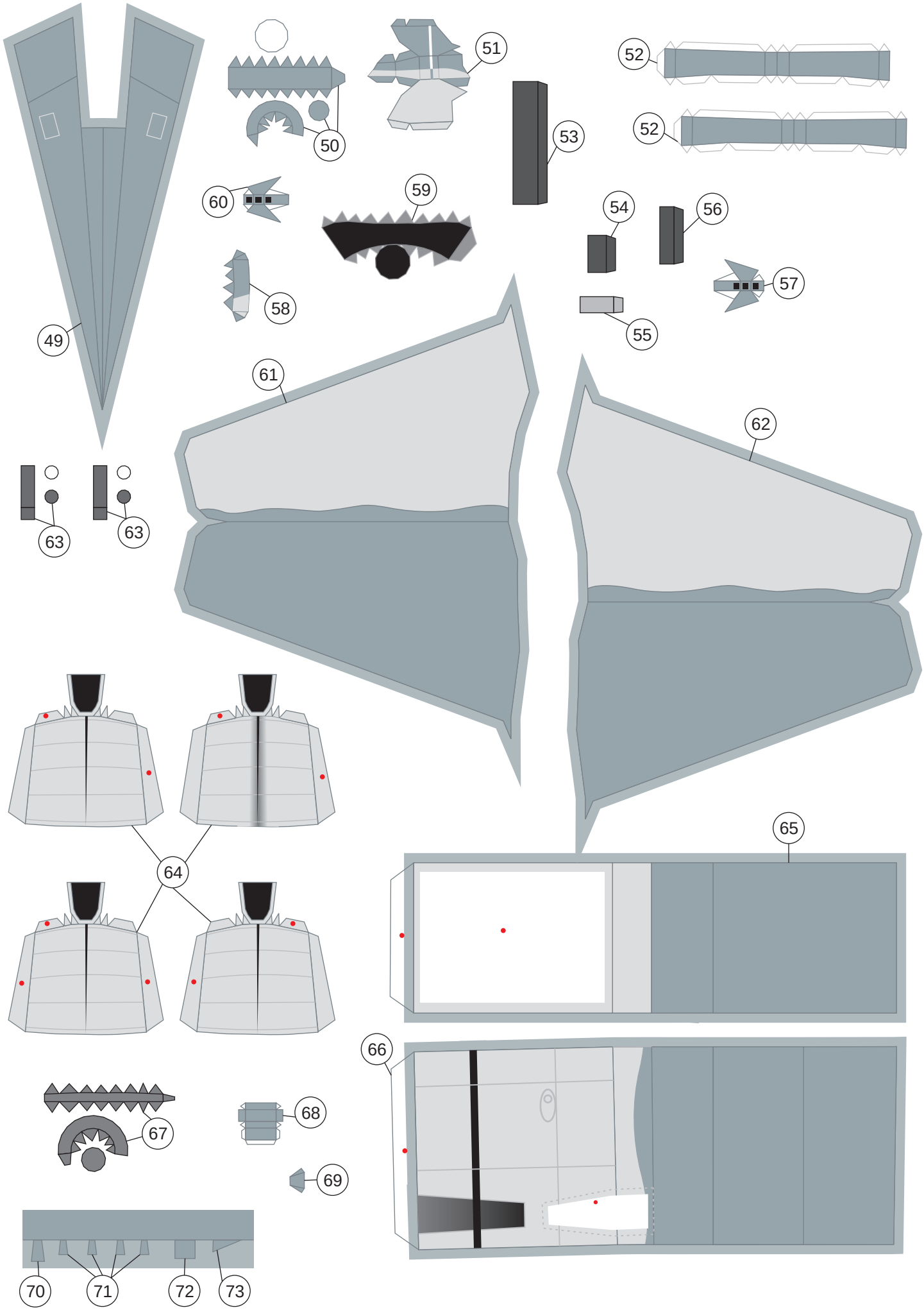
49
50
51
52
52
53
54
55
56
57
58
59
60
61
62
63
63
64
65
66
67
68
69
70
71
72
73

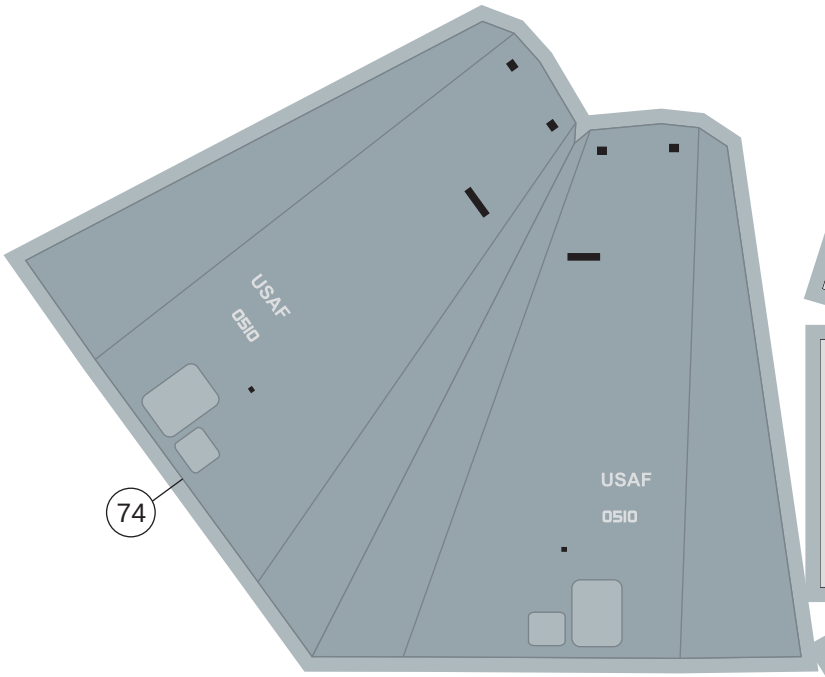
USAF
0510
USAF
0510
74

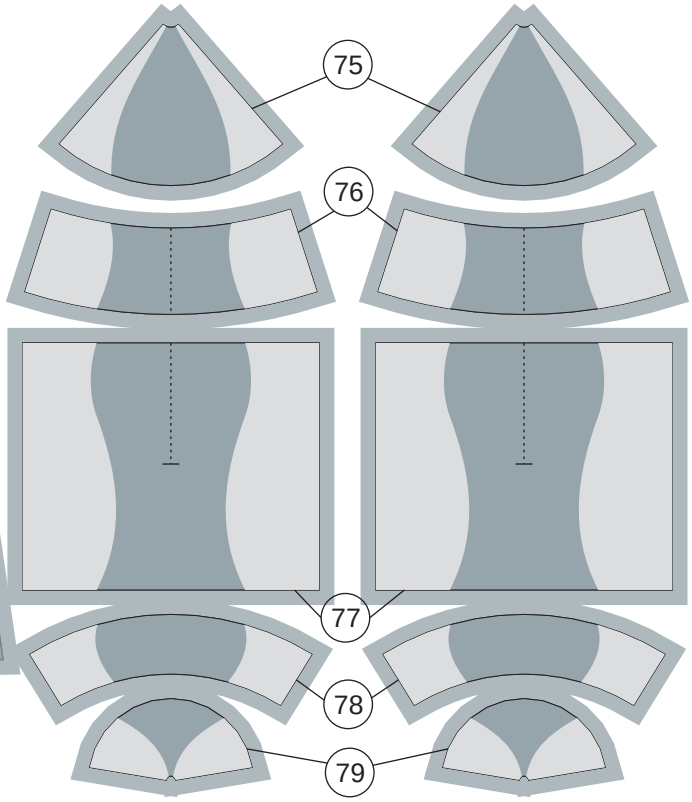
75
76
77
78
79

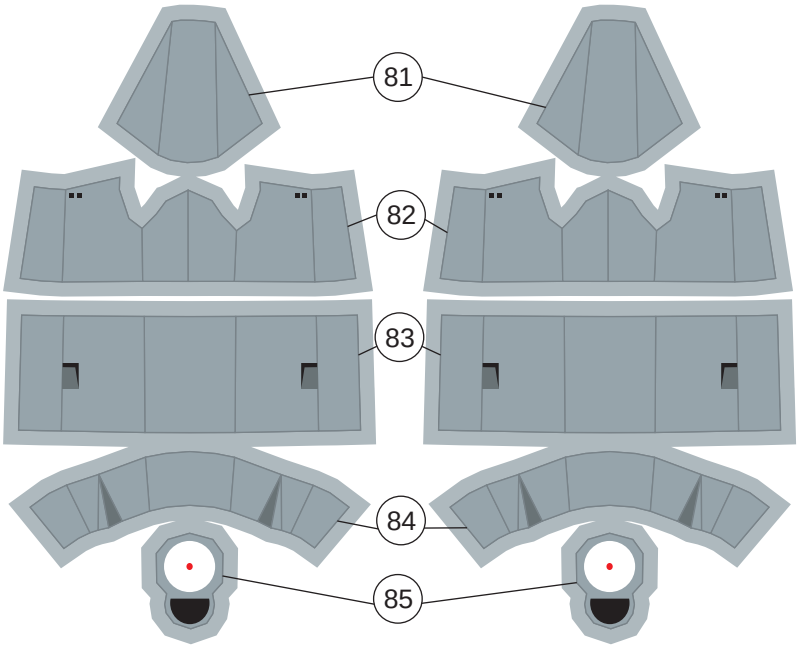
81
82
83
84
85

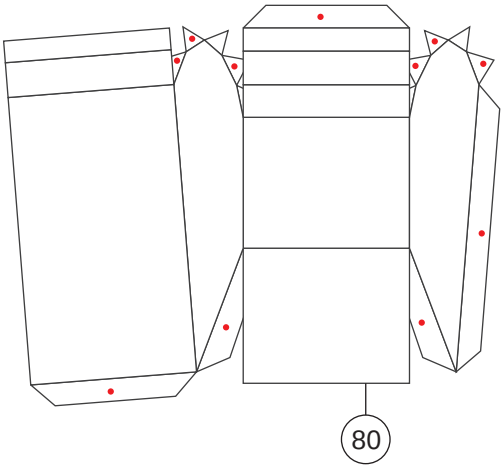
80

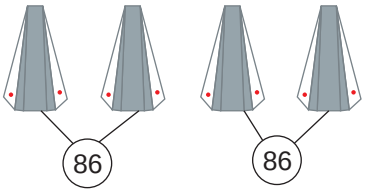
86
86

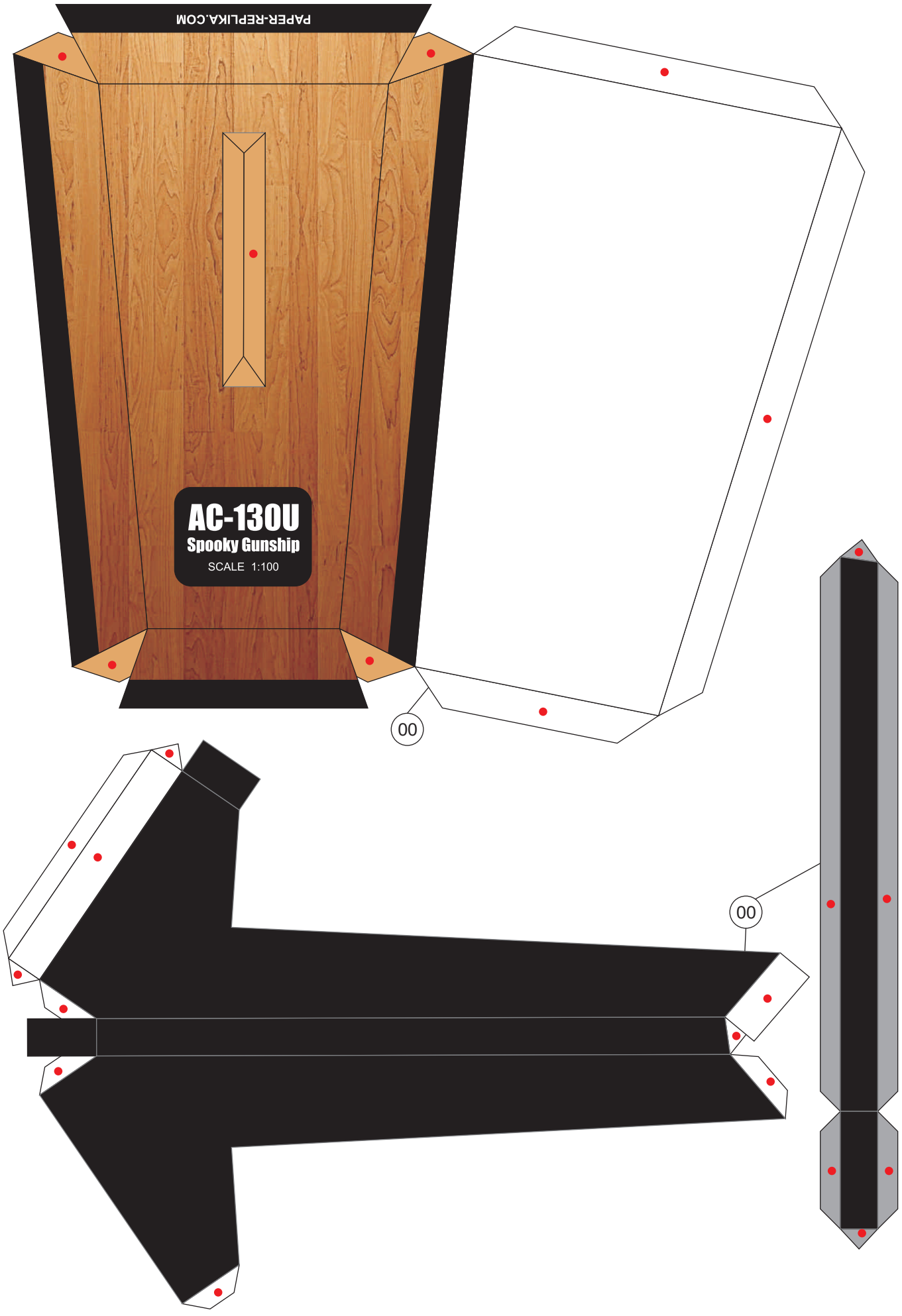
PAPER-REPLIKA.COM
AC-130U
Spooky Gunship
SCALE 1:100
00
00

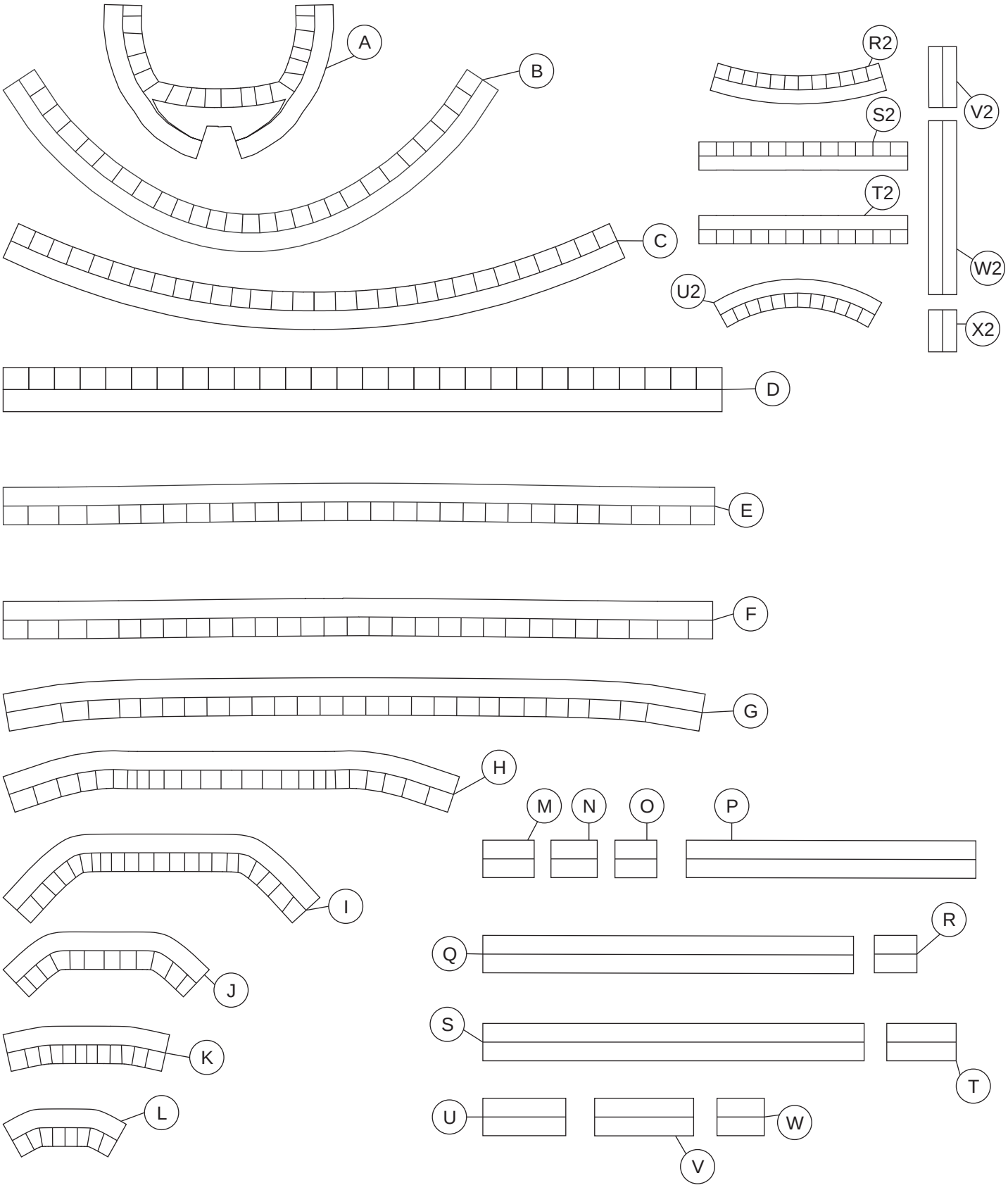
A
B
C
D
E
F
G
H
I
J
K
L
M
N
O
P
Q
R
S
T
U
V
W
X
Y
Z
A2
R2
S2
T2
U2
V2
W2
X2

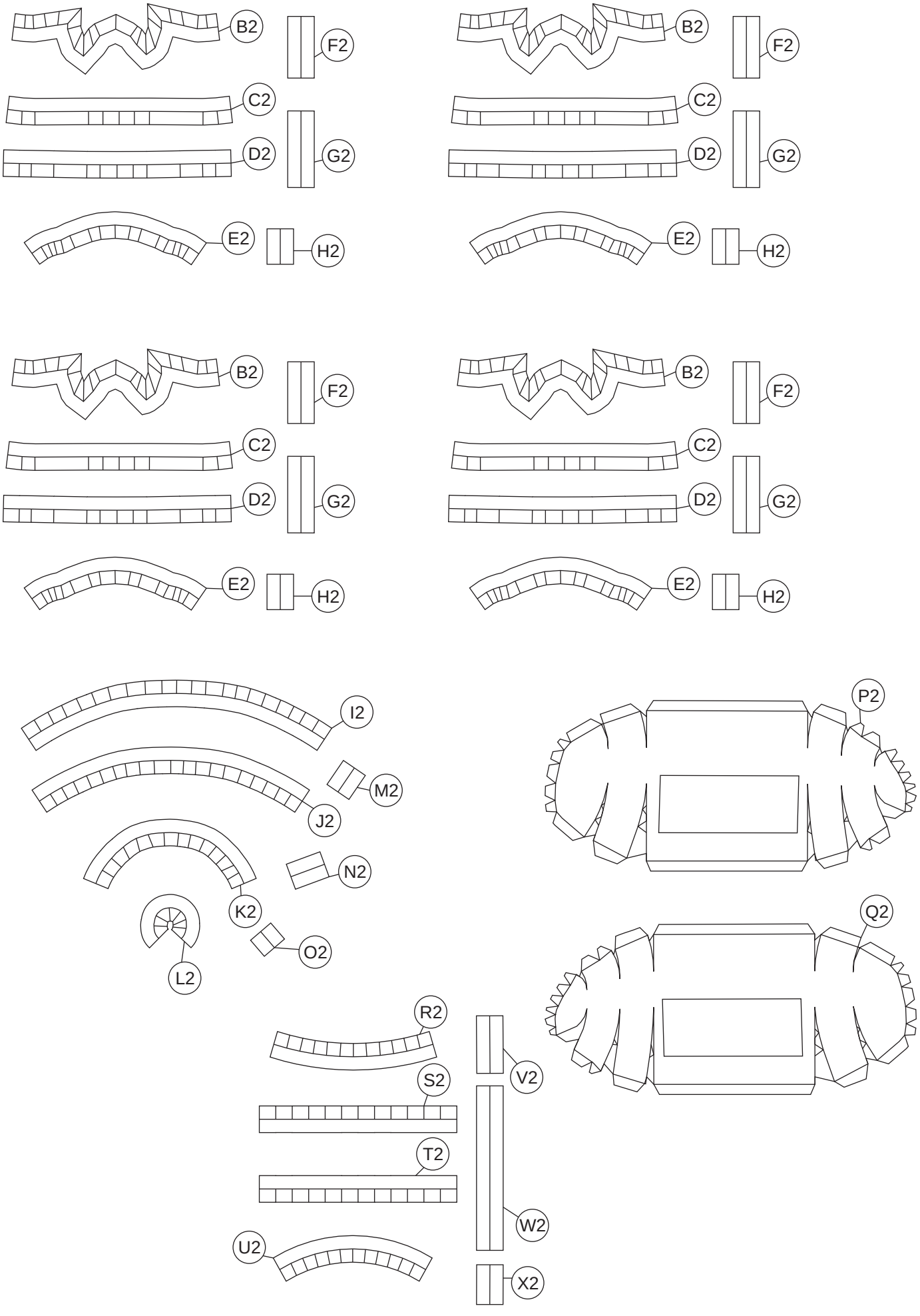
B2
F2
C2
D2
G2
E2
H2
B2
F2
C2
D2
G2
E2
H2
B2
F2
C2
D2
G2
E2
H2
B2
F2
C2
D2
G2
E2
H2
I2
M2
J2
N2
K2
O2
L2
P2
Q2
R2
V2
S2
T2
W2
U2
X2