Pieces diagram

If you can't open the pdo file, use the following images to figure out the right position of the pieces.

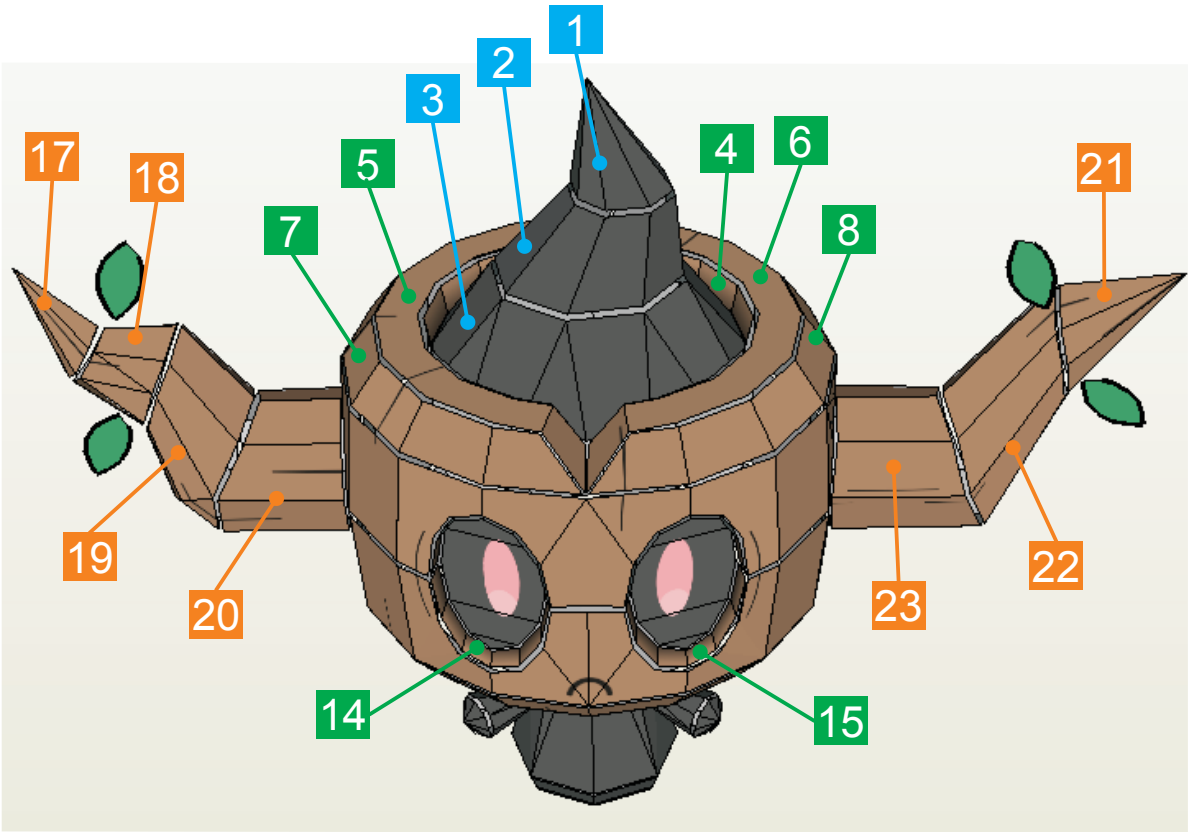

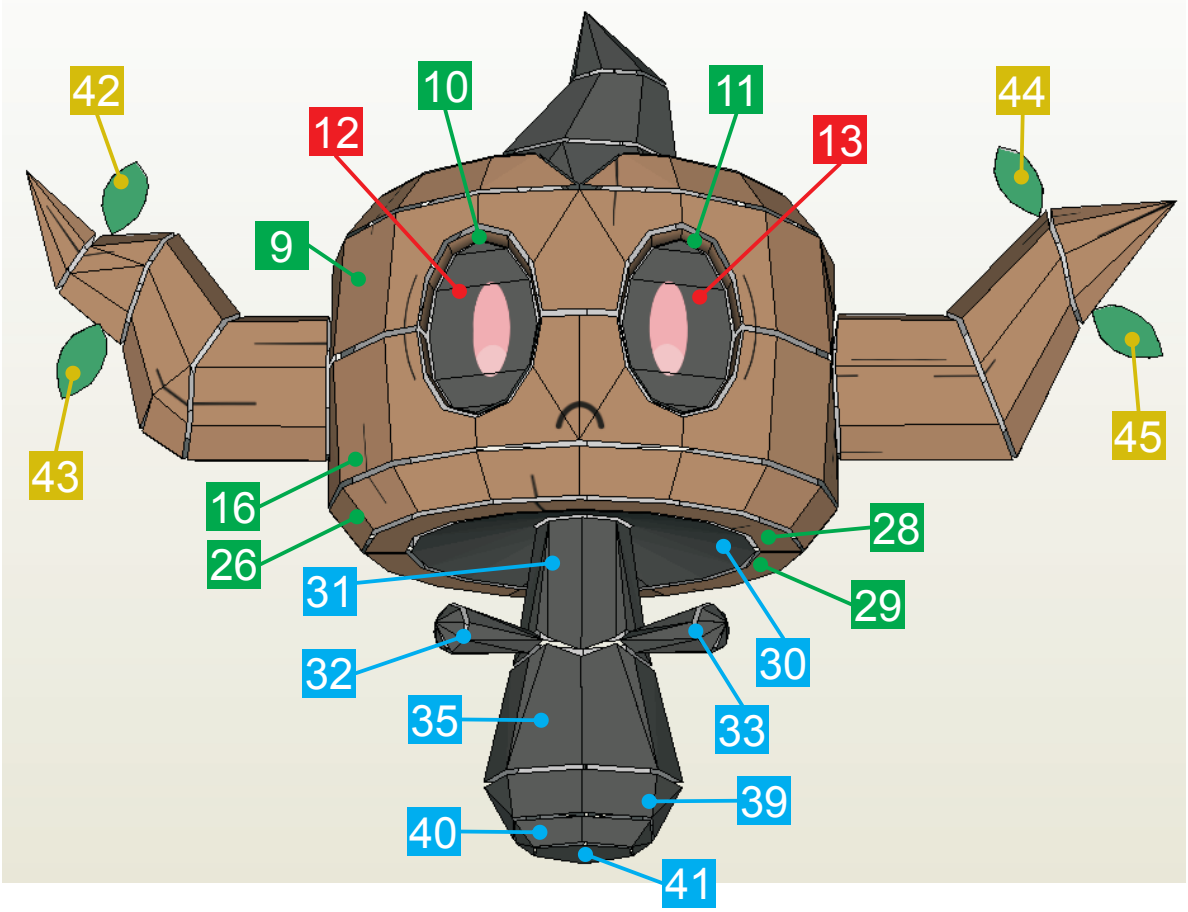

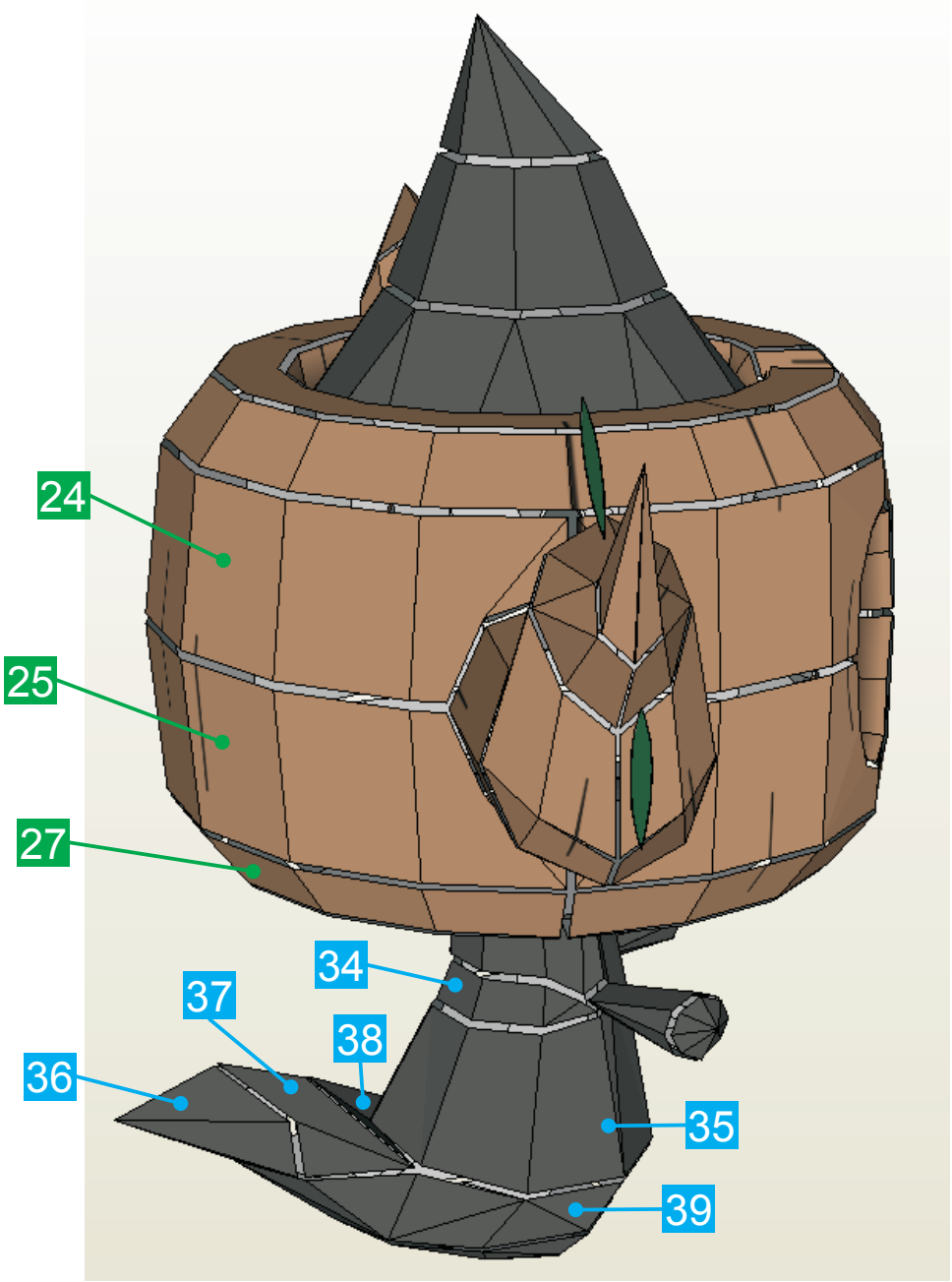
24
25
27
34
37
38
36
35
39