paperInside.com

transparkers

☆ bumblebee ☆

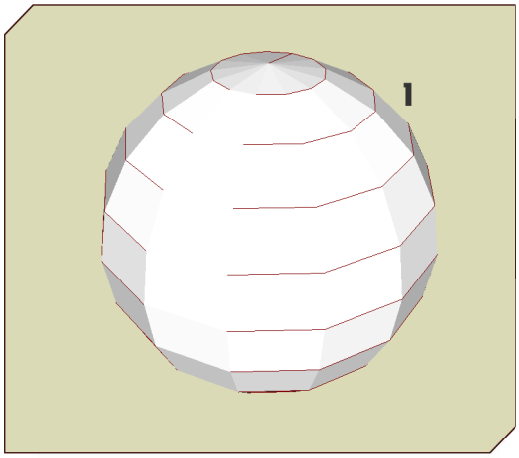

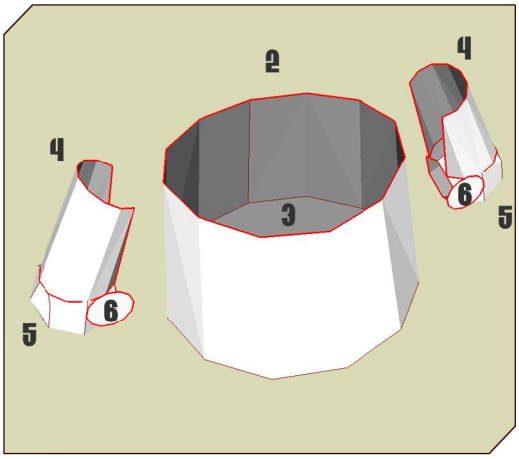

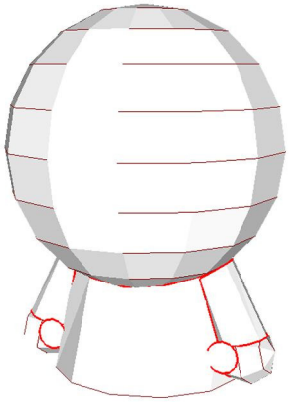

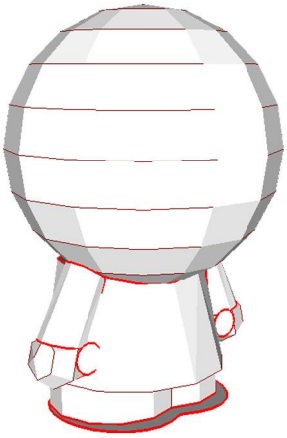

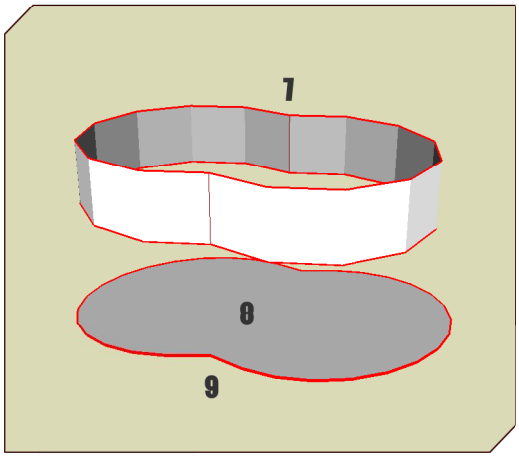

☆2009

4
11
4
6
5
1
7
2
5
11
9
www.paperinside.com
8
3
10