DL-44 GREEDO KILLER for Zealot Hobby Forum

Not for sale.

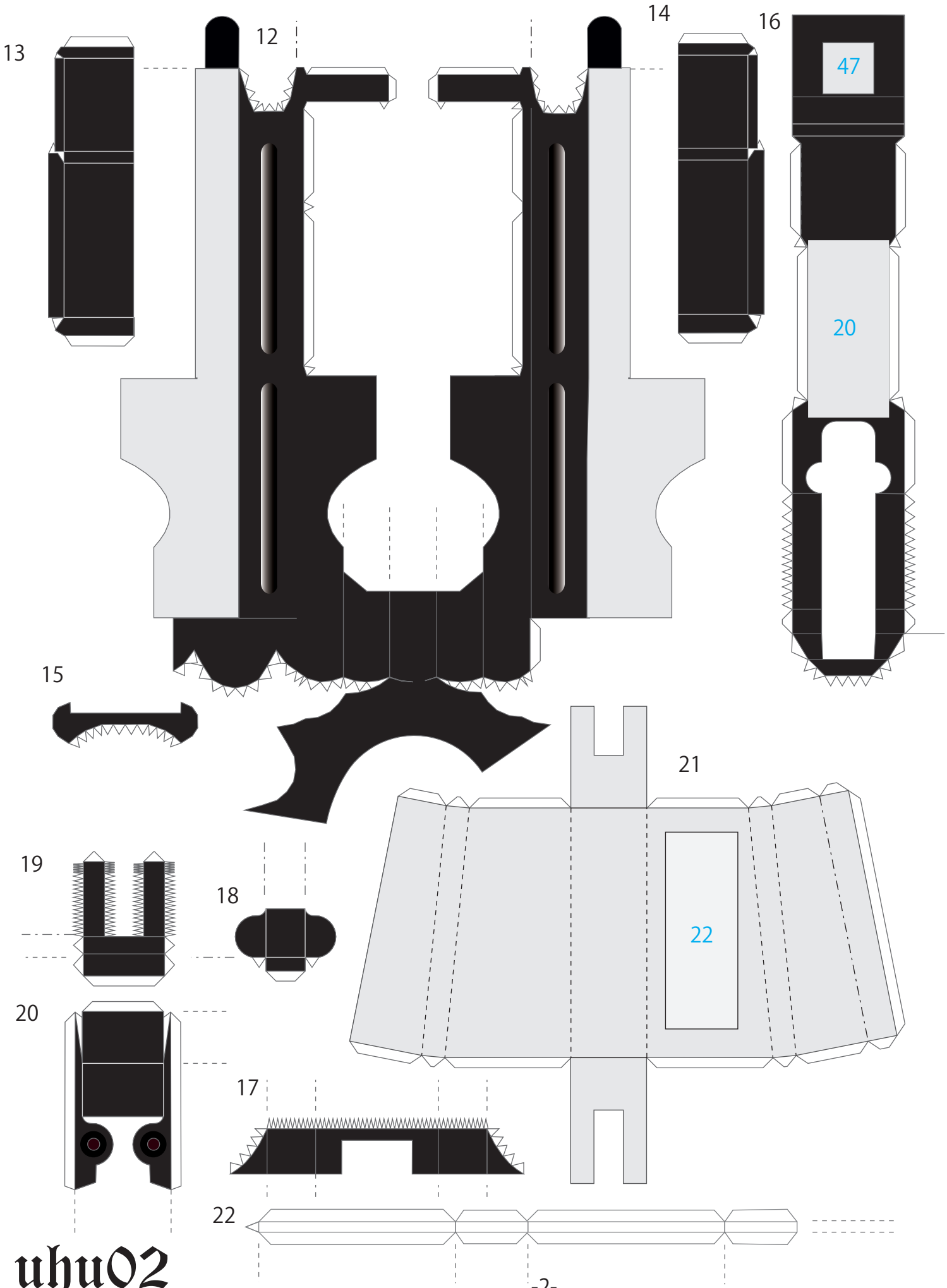

uhu02

http://uhu02.way-nifty.com/blogpapercraft_ver2/